BEFORE

AFTER

SHEET INDEX

SHEET DESCRIPTION	SHEET NO.
COVER AND SHEET INDEX	
GENERAL NOTES	G-101
DEMOLITION PLAN	LD-101
LANDSCAPE CONSTRUCTION PLAN	LC-101
LANDSCAPE PLANTING PLAN	LP-101
LANDSCAPE LIGHTING PLAN	LL-101
LANDSCAPE IRRIGATION PLAN	LI-101
ELECTRICAL PLAN - BASE BID	E-101
ELECTRICAL PLAN - ALTERNATE 1	E-102
ELECTRICAL DETAILS, LEGENDS AND NOTES	E-501
LANDSCAPE CONSTRUCTION DETAILS	LC-501-LC-502
LANDSCAPE PLANTING DETAILS & NOTES	LP-501
LANDSCAPE LIGHTING DETAILS & NOTES	LL-501
LANDSCAPE IRRIGATON DETAILS & NOTES	LI-501-LI-502

HUDSPETH COUNTY COURTHOUSE SITE IMPROVEMENTS

DesignScapes
DESIGN : CONSULTING
P.O. BOX 290544 : EL PASO, TX 79929
PH : 915.497.1944

THE STATE OF TEXAS
HUDSPETH COUNTY

109 MILLICAN ST.
SIERRA BLANCA, TX

FINAL FOR CONSTRUCTION
DATE: 6.16.2025

THIS DOCUMENT, WHETHER IN HARD OR DIGITAL IS COPYRIGHTED AND AN INSTRUMENT OF SERVICES IN RESPECT OF THE PROJECT FOR WHICH IT WAS PREPARED. THIS DOCUMENT IS NOT INTENDED OR AUTHORIZED FOR REUSE BY ANY PARTY ON EXTENSIONS OF SUCH PROJECT OR ANY OTHER PROJECT. ANY REUSE, INCLUDING COPYING AND/OR MODIFYING THE DOCUMENT, WITHOUT WRITTEN PERMISSION OF DESIGN SCAPES FOR THE SPECIFIC PURPOSE INTENDED IS A VIOLATION OF FEDERAL COPYRIGHT LAW. UNAUTHORIZED USE OF THIS MATERIAL MAY RESULT IN CIVIL AND/OR CRIMINAL PENALTIES..

GENERAL NOTES

1. THESE PLANS SHOW LANDSCAPE ARCHITECTURE CONSTRUCTION DOCUMENTS. THESE ARE NOT TO BE USED FOR STAKING OR SURVEYING LOT BOUNDARIES.
2. CONTRACTOR SHALL BE FAMILIAR WITH PLANS, DETAILS AND SPECIFICATIONS AS THEY PERTAIN TO THE SITE. IT SHALL BE THE CONTRACTOR'S RESPONSIBILITY TO NOTIFY THE LANDSCAPE ARCHITECT AND HUDSPETH COUNTY DESIGNATED REPRESENTATIVE IF ANY ITEMS CONTAINED WITHIN THE SCOPE OF WORK DEFINED HEREIN ARE IN CONFLICT WITH THE PROPOSED WORK OF OTHER CONTRACTORS.
3. CONTRACTOR SHALL BE RESPONSIBLE TO OBTAIN ALL NECESSARY PERMITS TO PERFORM THE REQUIRED WORK.
4. CHECK AND FIELD VERIFY ALL SITE CONDITIONS, UTILITIES AND SERVICES PRIOR TO EXCAVATION. EXISTING UTILITIES SHOWN ON PLANS ARE BASED ON SURVEY. TO PREVENT DAMAGE, CALL 1-800-DIG-TESS
5. IF PROBLEMS ARE DISCOVERED, CONTACT LANDSCAPE ARCHITECT & HUDSPETH COUNTY DESIGNATED REPRESENTATIVE TO DETERMINE A COURSE OF ACTION.
6. CONTRACTOR SHALL COORDINATE ALL WORK WITH OTHER CONTRACTORS.
7. A TEMPORARY 6' TALL CHAIN LINK FENCE SHALL BE INSTALLED ALONG PERIMETER OF CONSTRUCTION SITE FOR PROTECTION AT THE LIMITS OF IMPROVEMENTS.
8. CONTRACTOR SHALL PROTECT NEWLY GRADED AREAS FROM TRAFFIC AND EROSION. KEEP AREAS FREE OF TRASH AND DEBRIS.
9. PRIOR TO CONSTRUCTION, THE CONTRACTOR SHALL FIELD VERIFY THE HORIZONTAL AND VERTICAL LOCATIONS OF ALL POTENTIAL OBSTRUCTIONS. SHOULD A CONFLICT EXIST, THE CONTRACTOR SHALL NOTIFY THE LANDSCAPE ARCHITECT & HUDSPETH COUNTY DESIGNATED REPRESENTATIVE.
10. THE CONTRACTOR IS RESPONSIBLE FOR PROTECTING ALL EXISTING UTILITY LINES WITHIN THE CONSTRUCTION AREA. ANY DAMAGE TO EXISTING FACILITIES CAUSED BY CONSTRUCTION ACTIVITY SHALL BE REPAIRED OR REPLACED AT THE CONTRACTOR'S EXPENSE AND APPROVED BY THE CONSTRUCTION OBSERVER.
11. CONSTRUCTION ACTIVITY SHALL BE LIMITED TO THE PROPERTY AND/OR EXTENT OF PROJECT WORKS. ANY DAMAGE TO PROPERTY OUTSIDE OF PROJECT LIMITS RESULTING FROM THE CONSTRUCTION PROCESS SHALL BE REPAIRED OR REPLACED AT THE CONTRACTOR'S EXPENSE.
12. THE CONTRACTOR SHALL MAINTAIN ALL CONSTRUCTION BARRICADES AND SIGNING AT ALL TIMES. THE CONTRACTOR SHALL VERIFY THE PROPER LOCATION OF ALL BARRICADING AT THE END AND BEGINNING OF EACH DAY.
13. CONTRACTOR SHALL PROTECT TREE ROOT SYSTEMS FROM DAMAGE DUE TO NOXIOUS MATERIALS CAUSED BY RUNOFF OR SPILLAGE WHILE MIXING, PLACING, OR STORING CONSTRUCTION MATERIALS. PROTECT ROOT SYSTEMS FROM FLOODING, ERODING, OR EXCESSIVE WETTING CAUSED BY WATERING OPERATIONS.
14. SLOPES FOR ALL PAVED AND PLAYGROUND SURFACING SHALL BE 2% IN ALL DIRECTIONS. RUNNING SLOPE MAY BE 1:20 OR 5% MAX. AND A MAXIMUM 2% CROSS SLOPE. ALL PAVING SHALL DRAIN INTO GRASS AREAS OR CREATED SWALES WHENEVER POSSIBLE OR UNLESS OTHERWISE INDICATED.
15. ANY NEW SIDEWALK IN RIGHT OF WAY (R.O.W.) SHALL MEET HUDSPETH COUNTY STANDARDS IN EVERY WAY AND FOLLOW SLOPE OF EXISTING STREET.
16. ALL BERMS AND SWALES TO BE CONTOURED TO CREATE SMOOTH, GRADUAL TRANSITION BETWEEN PROPOSED LEVELS.
17. ALL PROPOSED LEVELS AND GRADING TO BE APPROVED ON SITE BY LANDSCAPE ARCHITECT PRIOR TO ANY CONSTRUCTION AND PLANTING.
18. LOCATION OF ALL TREES TO BE APPROVED ON SITE BY LANDSCAPE ARCHITECT PRIOR TO DIGGING OF HOLES AND PLANTING.
19. IF SPILLS, ENVIRONMENTAL CONTAMINATION, OR SUBSURFACE CONTAMINATION IS ENCOUNTERED, STOP WORK AND NOTIFY CITY ENVIRONMENTAL SERVICES AT 915-621-6700.
20. ALL TREES ALONG PEDESTRIAN WALKWAYS ALONG H/C ACCESSIBLE ROUTES SHALL BE PRUNED TO CREATE CANOPIES WITH MINIMUM 80" CLEAR SPACE FROM WALKING OR PAVED SURFACE.
21. EXISTING SIDEWALK AND ACCESSIBLE ROUTES SHALL REMAIN OPEN AND ACCESSIBLE THROUGHOUT THE PROJECT'S DURATION UNLESS THEY ARE WITHIN THE PROJECT LIMITS.
22. CONTRACTOR SHALL KEEP A PLAN SET ON-SITE FOR REDLINED MARK-UPS THAT CAN BE INCORPORATED INTO THE RECORD DRAWINGS. THE MARK-UPS SHALL BE UPDATED DAILY AND MADE AVAILABLE TO BE VIEWED BY LANDSCAPE ARCHITECT. MARK-UPS WILL BE PROVIDED TO THE LANDSCAPE ARCHITECT UPON PROJECT'S COMPLETION FOR INCORPORATION INTO THE RECORD DRAWINGS THAT WILL BE PRODUCED BY THE LANDSCAPE ARCHITECT.
23. THIS PROJECT IS LOCATED AT A PUBLIC FACILITY. CONTRACTOR SHALL NOT LEAVE UNPROTECTED TRENCHES IN CONSTRUCTION AREA. ALL CONSTRUCTION TRENCHES SHOULD BE COVERED IMMEDIATELY.

DESIGN FIRM
DesignScapes
DESIGN : CONSULTING
P.O. BOX 290544 : EL PASO, TX 79929
PH : 915.497.1944
EMAIL: DESIGNSCAPESCONSULTING@GMAIL.COM

SEAL
DEBORAH A. BLEA
6·16·25

HORIZ. SCALE: AS INDICATED
VERT. SCALE: AS INDICATED
DATE: JUNE 2025
DESIGNED BY: DEBORAH BLEA
DRAWN BY: STAFF
CHECKED BY: DEBORAH BLEA
APPROVED BY: DEBORAH BLEA
JOB NAME: HCC SITE IMP

△ REVISIONS
1.
2.
3.
4.
5.
6.
7.
8.

PROJECT
NAME: HUDSPETH COUNTY COURTHOUSE SITE IMPROVEMENTS
ADDRESS: 109 MILLICAN ST. SIERRA BLANCA, TX

FINAL FOR CONSTRUCTION

GENERAL NOTES

G-001

THIS DOCUMENT, WHETHER IN HARD OR DIGITAL IS COPYRIGHTED AND AN INSTRUMENT OF SERVICES IN RESPECT OF THE PROJECT FOR WHICH IT WAS PREPARED. THIS DOCUMENT IS NOT INTENDED OR AUTHORIZED FOR REUSE BY ANY PARTY ON EXTENSIONS OF SUCH PROJECT OR ANY OTHER PROJECT. ANY REUSE, INCLUDING COPYING AND/OR MODIFYING THE DOCUMENT, WITHOUT WRITTEN PERMISSION OF DESIGN SCAPES FOR THE SPECIFIC PURPOSE INTENDED IS A VIOLATION OF FEDERAL COPYRIGHT LAW. UNAUTHROZED USE OF THIS MATERIAL MAY RESULT IN CIVIL AND/OR CRIMINAL PENALTIES.

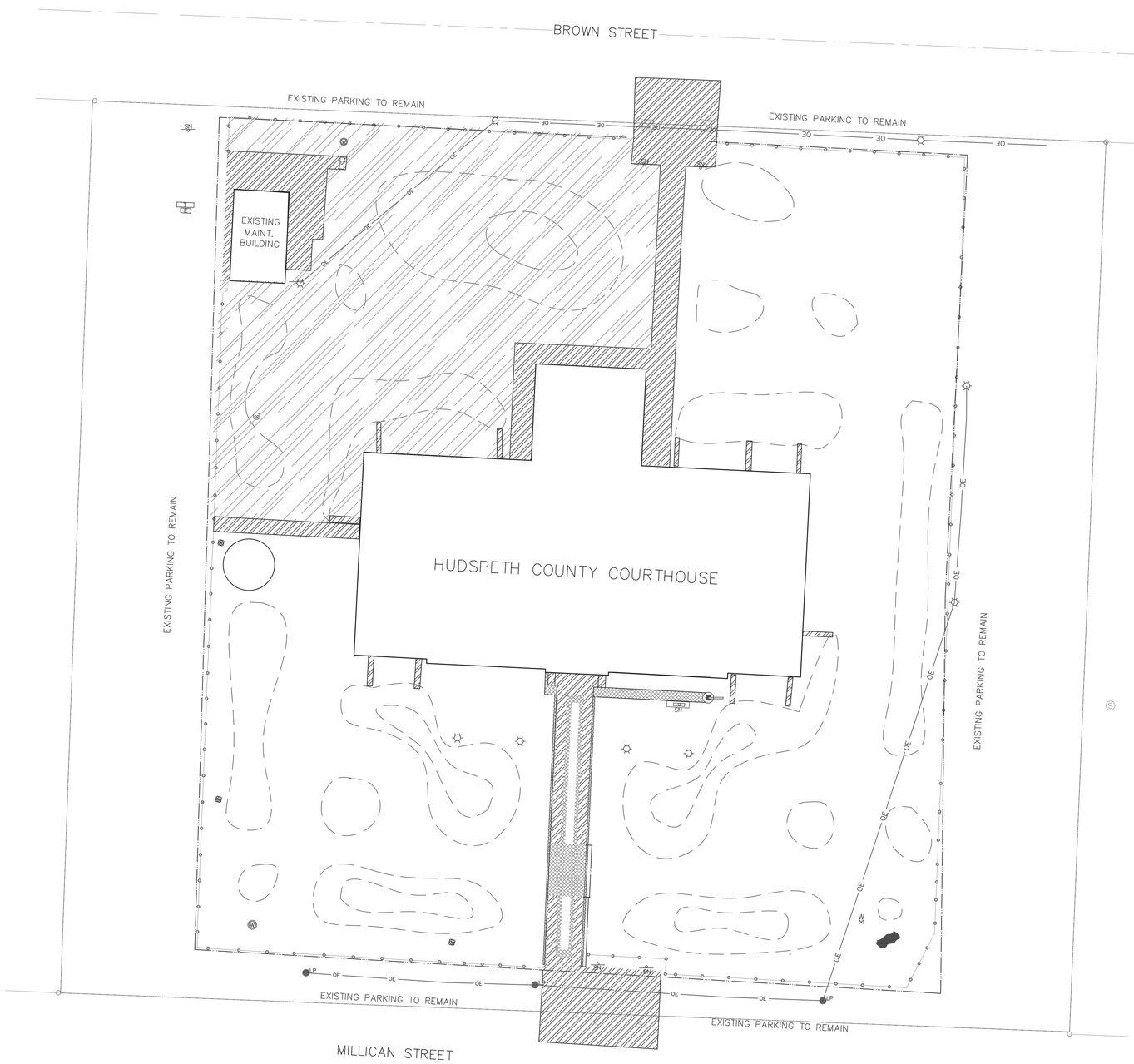

DEMOLITION PLAN

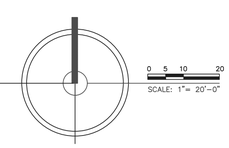

LEGEND.....GENERAL

- PROPERTY LINE
- PROJECT LIMIITS
- EXISTING BOLLARDS AND CHAIN TO BE REMOVED, MOVE TO STORAGE LOCATION OR DISPOSE OF PROPERLY
- OE — EXISTING OVERHEAD ELECTRIC, SEE ELECTRICAL PLANS
- LP — EXISTING LIGHT FIXTURES AND LIGHT POLES, SEE ELECTRICAL PLANS
- EXISTING CONCRETE RUNNELS, PROTECT FROM DAMAGE.
- CO — EXISTING CLEAN OUT, PROTECT FROM DAMAGE.
- EXISTING ELEMENT, PROTECT FROM DAMAGE.
- W — EXISTING WATER METER, PROTECT FROM DAMAGE.
- WV — EXISTING WATER VALVE, PROTECT FROM DAMAGE.
- SN — EXISTING SIGN, PROTECT FROM DAMAGE.
- EXISTING UTILITY BOXES, PROTECT FROM DAMAGE.

LEGEND.....DEMOLITION

- EXISTING FLAGPOLE TO BE MOVED TO NEW LOCATION. SEE LC-101 FOR NEW LOCATION.
- EXISTING TREE TO REMAIN
- EXISTING BOULDER TO BE MOVED TO NEW LOCATION. SEE LC-101 FOR NEW LOCATION.
- SN — EXISTING SIGN TO BE MOVED TO NEW LOCATION. SEE LC-101 FOR NEW LOCATION.
- EXISTING CONCRETE SIDEWALK TO REMAIN, PROTECT FROM DAMAGE.
- EXISTING CONCRETE SIDEWALK, FLAGSTONE OR CURB TO BE REMOVED, SAW CUT, REMOVE AND DISPOSE OF PROPERLY. SAWCUT CURB AS CLOSELY TO CURB AS POSSIBLE TO PRESERVE AS MUCH OF SIDEWALK IN TACT FOR REUSE.
- EXISTING ROCK, REMOVE AND DISPOSE OF PROPERLY.
- NEW SWALE, EXCAVATE 1 FT. PER CONTOUR INDICATED, PROVIDE SMOOTH TRANSITION AND SMOOTH SIDES.

NOTES.....DEMOLITION

1. AFTER DEMOLITION OF CONCRETE, FLAGSTONE, CURBS, ETC. AND INSTALLATION OF NEW CONCRETE AND PAVING INDICATED ON LC-101, EXCAVATE TO A 4 INCH DEPTH FOR A WIDTH OF 12 INCHES ALONG ALL PAVED SURFACES (EXCEPT RUNNELS, EXCAVATE TO A DEPTH OF 2" AT RUNNELS) TO ALLOW FOR INSTALLATION OF ROCK AND GRADE TO CREATE A SMOOTH TRANSITION.

2. ANY OLD IRRIGATION EQUIPMENT ENCOUNTERED, SHALL BE REMOVED IF ABOVE GRADE AND ABANDONED IN PLACE IF BELOW GRADE.

DESIGN FIRM
DesignScapes
DESIGN : CONSULTING
P.O. BOX 290844 : EL PASO, TX 79929
EMAIL: DESIGNSCAPESCONSULTING@GMAIL.COM
PH : 915.497.1944

SEAL
REGISTERED LANDSCAPE ARCHITECT
DEBORAH A. BLEA
3007
STATE OF TEXAS
6·16·25

HORIZ. SCALE: AS INDICATED
VERT. SCALE: AS INDICATED
DATE: JUNE 2025
DESIGNED BY: DEBORAH BLEA
DRAWN BY: STAFF
CHECKED BY: DEBORAH BLEA
APPROVED BY: DEBORAH BLEA
JOB NAME: HCC SITE IMP

△ REVISIONS
1.
2.
3.
4.
5.
6.
7.
8.

PROJECT
NAME: HUDSPETH COUNTY COURTHOUSE SITE IMPROVEMENTS
ADDRESS: 109 MILLICAN ST. SIERRA BLANCA, TX

THE STATE OF TEXAS
HUDSPETH COUNTY

FINAL FOR CONSTRUCTION

DEMOLITION PLAN

LD-101

THIS DOCUMENT, WHETHER IN HARD OR DIGITAL IS COPYRIGHTED AND AN INSTRUMENT OF SERVICES IN RESPECT OF THE PROJECT FOR WHICH IT WAS PREPARED. THIS DOCUMENT IS NOT INTENDED OR AUTHORIZED FOR REUSE BY ANY PARTY ON EXTENSIONS OF SUCH PROJECT OR ANY OTHER PROJECT, ANY REUSE, INCLUDING COPYING AND/OR MODIFYING THE DOCUMENT, WITHOUT WRITTEN PERMISSION OF DESIGN SCAPES FOR THE SPECIFIC PURPOSE INTENDED IS A VIOLATION OF FEDERAL COPYRIGHT LAW. UNAUTHORIZED USE OF THIS MATERIAL MAY RESULT IN CIVIL AND/OR CRIMINAL PENALTIES.

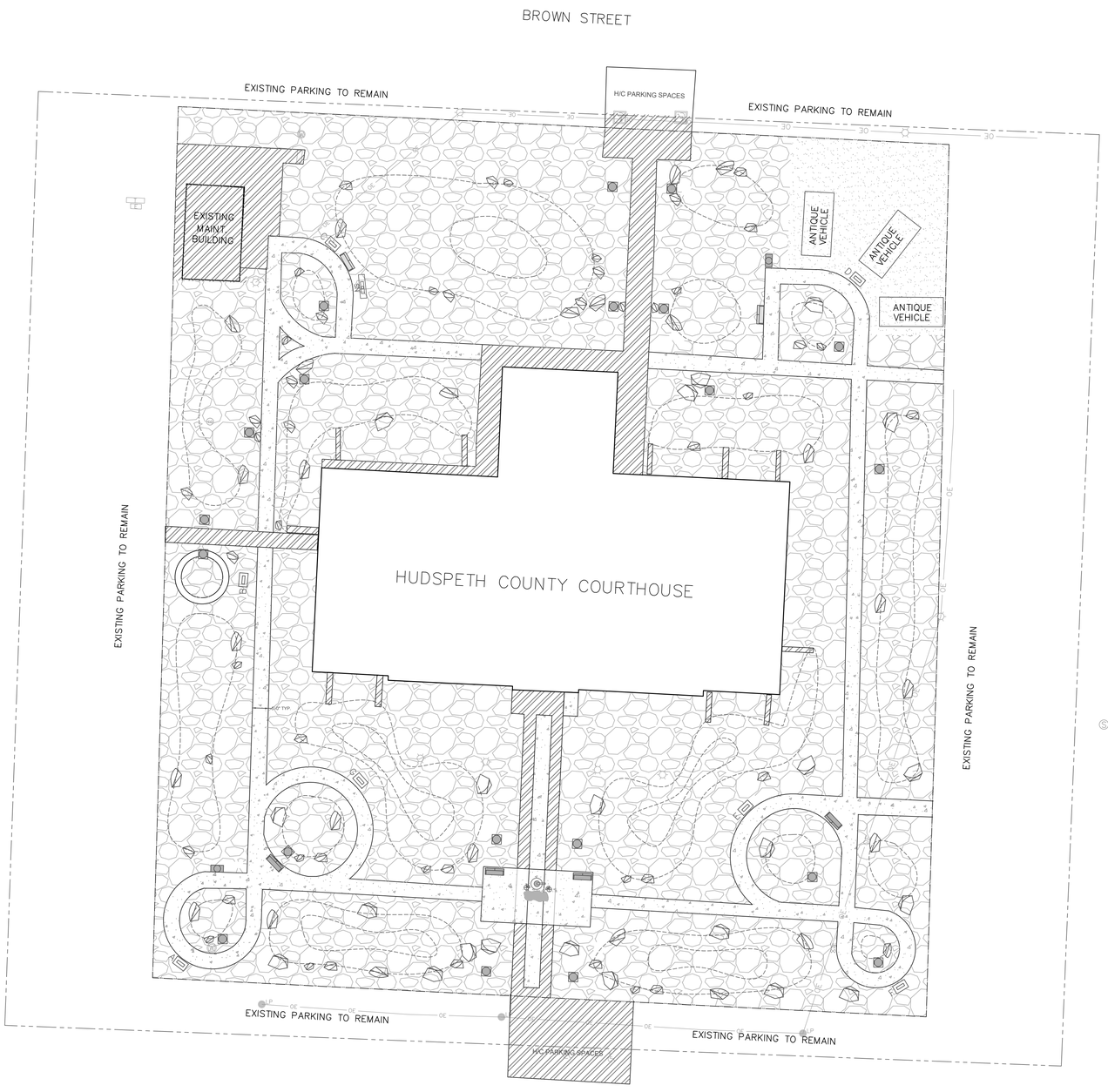

CONSTRUCTION PLAN

SCALE: 1" = 20'-0"

LEGEND.....GENERAL

- EXISTING OVERHEAD ELECTRIC, SEE ELECTRICAL PLANS
- EXISTING LIGHT FIXTURES AND LIGHT POLES, SEE ELECTRICAL PLANS
- EXISTING CONCRETE FLUMES, PROTECT FROM DAMAGE.
- EXISTING CLEAN OUT, PROTECT FROM DAMAGE.
- EXISTING WATER FAUCET, PROTECT FROM DAMAGE.
- EXISTING WATER METER, PROTECT FROM DAMAGE.
- EXISTING WATER VALVE, PROTECT FROM DAMAGE.
- EXISTING SIGN, PROTECT FROM DAMAGE.
- EXISTING UTILITY BOXES & COMPONENTS, PROTECT FROM DAMAGE.
- NEW LOCATION FOR EXISTING SIGN.
- PROPERTY LINE
- PROJECT LIMIITS

LEGEND.....LANDSCAPE..CONSTRUCTION

ALL ITEMS SHALL BE AS INDICATED OR APPROVED EQUAL

- FLAG POLE–PROVIDED AND INSTALLED BY OWNER, PROTECT FROM DAMAGE.
- PROVIDE AND INSTALL THOMAS STEELE AURORA BENCH. SEE DETAIL C/LC–501
- PROVIDE AND INSTALL THOMAS STEELE CHANDLER TRASH RECEPTACLE. SEE DETAIL F
- X INTERPRETIVE SIGN, ADJACENT LETTER REFERS TO SIGN LEGEND BELOW, SEE DETAIL B/LC–502
- EXISTING BOULDER – EXISTING BOULDER WILL BE MOVED TO NEW LOCATION. CONTRACTOR SHALL PROVIDE AND INSTALL BUILDING NAME ON SIGN, SEE DETAIL A/LC–502
- EXISTING TREE TO REMAIN, PROTECT FROM DAMAGE. SEE PROTECTION DETAIL A/LC–501.
- INSTALL SWALE, PROVIDE ONE FOOT PER CONTOUR LINE AND SMOOTH SIDES TO PROVIDE GRADUAL TRANSITION.
- BOULDERS, PROVIDED AND INSTALLED BY OTHERS
- LIGHTING, SEE ELECTRICAL SHEET E–100.
- LOW–VOLTAGE LANDSCAPE LIGHTING, SEE SHEET LL–101

MATERIALS–LEGEND

- EXISTING ELEMENT TO REMAIN: PAVING, STAIRS, ETC. PROTECT FROM DAMAGE.
- PROVIDE AND INSTALL 4" DEPTH CONCRETE. BROOM FINISH, STANDARD GREY COLOR. ALTERNATE 1: SALT FINISH ALL DIRECTIONS, SEE DETAIL B/LC–501.
- ROCK MULCH, NO WEED FABRIC, PROVIDED AND DELIVERED BY OTHERS, INSTALLED BY CONTRACTOR.
- ROCK SCREENINGS, NO WEED FABRIC, PROVIDED AND DELIVERED BY OTHERS, INSTALLED BY CONTRACTOR.

SIGN–LEGEND

LOCATION OF SIGNS ON PLAN IS APPROXIMATE, COORDINATE EXACT LOCATION WITH LANDSCAPE ARCHITECT TO FACILITATE EASE OF MOVEMENT AND READABILITY.

EXACT TEXT, IMAGES AND CAMERA READY DOCUMENTS SHALL BE PROVIDED DURING CONSTRUCTION. SEE DETAIL B/LC–502.

LETTER ADJACENT TO SIGN ICON IDENTIFIES SUBJECT OF SIGN AND WILL BE AS INDICATED:

A. RAILROADS
B. OAK TREE
C. HISTORIC ARCHITECTURE
D. HUDSPETH COUNTY HISTORY
E. TBD
F. TBD
G. TBD

LETTERS INDICATED AS TBD ARE ADDITIVE ALTERNATES AND SUBJECT WILL BE PROVIDED DURING CONSTRUCTION IF ALTERNATE IS ACCEPTED.

NOTES

CONTRACTOR SHALL FIELD LOCATE AND COORDINATE ALL ELEMENTS THAT ARE BEING INSTALLED OR MOVED BY MARKING ON–SITE FOR APPROVAL BY LANDSCAPE ARCHITECT PRIOR TO INSTALLING.

FINAL FOR CONSTRUCTION

DESIGN FIRM
DesignScapes
DESIGN : CONSULTING
P.O. BOX 290544 : EL PASO, TX 79929
EMAIL: PH : 915.497.1944
DESIGNSCAPESCONSULTING@GMAIL.COM

SEAL
REGISTERED LANDSCAPE ARCHITECT
DEBORAH A. BLEA
3007
STATE OF TEXAS
6·16·25

HORIZ. SCALE: AS INDICATED
VERT. SCALE: AS INDICATED
DATE: JUNE 2025
DESIGNED BY: DEBORAH BLEA
DRAWN BY: STAFF
CHECKED BY: DEBORAH BLEA
APPROVED BY: DEBORAH BLEA
JOB NAME: HCC SITE IMP

△ REVISIONS
1.
2.
3.
4.
5.
6.
7.
8.

PROJECT
NAME: HUDSPETH COUNTY COURTHOUSE SITE IMPROVEMENTS
ADDRESS: 109 MILLICAN ST. SIERRA BLANCA, TX

CONSTRUCTION PLAN

LC-101

THIS DOCUMENT, WHETHER IN HARD OR DIGITAL IS COPYRIGHTED AND AN INSTRUMENT OF SERVICES IN RESPECT OF THE PROJECT FOR WHICH IT WAS PREPARED. THIS DOCUMENT IS NOT INTENDED OR AUTHORIZED FOR REUSE BY ANY PARTY ON EXTENSIONS OF SUCH PROJECT OR ANY OTHER PROJECT, ANY REUSE, INCLUDING COPYING AND/OR MODIFYING THE DOCUMENT, WITHOUT WRITTEN PERMISSION OF DESIGN SCAPES FOR THE SPECIFIC PURPOSE INTENDED IS A VIOLATION OF FEDERAL COPYRIGHT LAW. UNAUTHORIZED USE OF THIS MATERIAL MAY RESULT IN CIVIL AND/OR CRIMINAL PENALTIES.

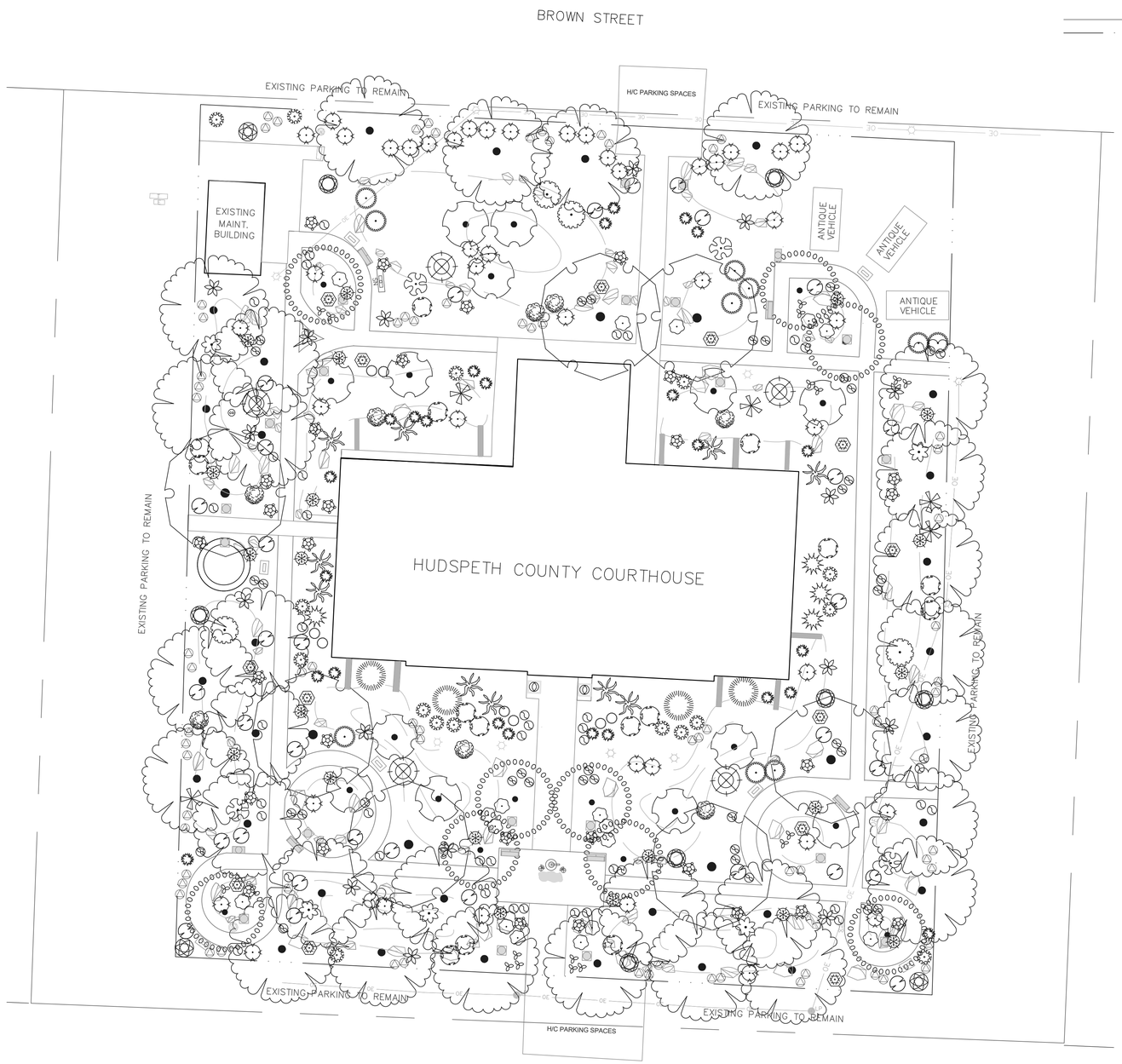

PLANTING PLAN

0 5 10 20
SCALE: 1"= 20'-0"

LEGEND.....GENERAL

- PROPERTY LINE
- PROJECT LIMITS
- OE — EXISTING OVERHEAD ELECTRIC, SEE E-101
- LP — EXISTING LIGHT FIXTURES/LIGHT POLES, SEE E-101
- EXISTING CONCRETE FLUMES, PROTECT FROM DAMAGE.
- EXISTING CLEAN OUT, PROTECT FROM DAMAGE.
- EXISTING WATER FAUCET, PROTECT FROM DAMAGE.
- EXISTING WATER METER, PROTECT FROM DAMAGE.
- EXISTING WATER VALVE, PROTECT FROM DAMAGE.
- EXISTING SIGN, PROTECT FROM DAMAGE.
- EXISTING TREE, PROTECT FROM DAMAGE.
- EXISTING UTILITY BOXES, PROTECT FROM DAMAGE.
- FLAG POLE
- BENCH
- TRASH RECEPTACLE
- SIGN
- BUILDING NAME BOULDER
- PROVIDE AND INSTALL ECOPOT CRESCENT GARDEN 22" BOWERY TALL SQUARE 29 GAL. PLANTER WITH INDICATED PLANT, WWW.EPLANTERS.COM, SEE C/LP-501
- BOULDERS, SEE LC-101
- LANDSCAPE LIGHTING, SEE LL-101

PLANT.....SCHEDULE

TREES : INSTALL PER DETAIL A/LP-501

QTY	BOTANICAL / COMMON NAME	CAL.	COMMENTS
9	PARKINSONIA X 'DESERT MUSEUM' DESERT MUSEUM PALO VERDE	24" BOX	SINGLE TRUNK MIN. 8' HEIGHT
30	PROSOPIS GLANDULOSA 'THORNLESS AZT' THORNLESS HONEY MESQUITE	24" BOX, 2" CAL., SINGLE TRUNK MIN. 10' HEIGHT	
13	CHILOPSIS LINEARIS DESERT WILLOW	15 GALLON	
7	QUERCUS FUSIFORMIS ESCARPMENT LIVE OAK	24" BOX, 2" CAL., SINGLE TRUNK MIN. 10' HEIGHT	

ACCENT PLANTS : INSTALL PER DETAIL B/LP-501

QTY	BOTANICAL / COMMON NAME	SIZE	COMMENTS
10	FOQUIERIA SPLENDENS OCOTILLO	SEE NOTE BELOW	
3	DASYRILION WHEELERI SOTOL/DESERT SPOON	5 GAL.	
4	YUCCA TORREYI TORREY'S YUCCA	5 GAL.	
25	AGAVE LECHUGUILLA LECHUGUILLA	5 GAL.	
4	YUCCA THOMPSONIANA THOMPSON'S YUCCA	5 GAL.	
16	OPUNTIA ENGLEMANNII 'SANTA RITA' SANTA RITA PRICKLY PEAR	5 GAL.	
8	FEROCACTUS WISLIZENI FISHHOOK BARREL CACTUS	5 GAL.	
4	YUCCA PALLIDA PALE LEAF YUCCA	5 GAL.	

SHRUBS & PERENNIALS : INSTALL PER DETAIL B/LP-501

	BOTANICAL / COMMON NAME	SIZE
5	DALEA PULCHRA PEA BUSH	5 GAL.
9	SENNA LINDHEIMERIANA LINDHEIMER CASSIA	5 GAL.
6	ANISACANTHUS QUADRIFIDUS MEXICAN FIRE	5 GAL.
5	TECOMA STANS YELLOW BELLS	5 GAL.
6	SENNA LINDHEIMERIANA LINDHEIMER CASSIA	5 GAL.
9	LEUCOPHYLLUM ZYGOPHYLUM BLUE RANGER SAGE	5 GAL.
16	PENSTEMON AMBIGUUS SAND PENSTEMON	5 GAL.
18	SALVIA GREGGII AUTUMN SAGE	5 GAL.
6	LLEUCOPHYLUM LAEVIGATUM CHIHUAHUAN SAGE	5 GAL.
28	MUHLENBERGIA CAPILLARIS REGAL MIST MUHLY	5 GAL.
8	LARREA TRIDENTATA CREOSOTE BUSH	5 GAL.
14	SENNA COVESII COVE'S CASSIA	5 GAL.
17	CAESALPINIA GILLIESII DESERT BIRD OF PARADISE	5 GAL.
22	MONARDA CITRIODORA LEMON BEEBALM	5 GAL.
33	DALEA CAPITATA LEMON DALEA	5 GAL.
30	CHRYSACTINIA MEXICANA DAMIANITA DAISY	5 GAL.
18	PENSTEMON SUPERBUS CORAL BEARDTONGUE	1 GAL.
34	PENSTEMON PSEUDOSPECTABILIS DESERT BEARDTONGUE	1 GAL.
45	PENSTEMON HAVARDII BIG BEND BEARDTONGUE	1 GAL.
70	BERLANDIERA LYRATA CHOCOLATE FLOWER	1 GAL.

NOTE: OCOTILLO SHALL BE BARE ROOT OR SEED GROWN, MIN. 5~4' CANES, IF SALVAGED FROM SITE CLEARING, DOCUMENTATION WILL BE REQUIRED. DESERT HARVESTED OCOTILLOS FROM NATIVE AREAS WILL NOT BE ACCEPTED.

FINAL FOR CONSTRUCTION

DESIGN FIRM
DesignScapes
DESIGN : CONSULTING
P.O. BOX 200544 : EL PASO, TX 79929
EMAIL: PH : 915.497.1944
DESIGNSCAPESCONSULTING@GMAIL.COM

SEAL
REGISTERED LANDSCAPE ARCHITECT
DEBORAH A. BLEA
3007
STATE OF TEXAS
6·16·25

HORIZ. SCALE: AS INDICATED
VERT. SCALE: AS INDICATED
DATE: JUNE 2025
DESIGNED BY: DEBORAH BLEA
DRAWN BY: STAFF
CHECKED BY: DEBORAH BLEA
APPROVED BY: DEBORAH BLEA
JOB NAME: HCC SITE IMP

△ REVISIONS
1.
2.
3.
4.
5.
6.
7.
8.

PROJECT
NAME: HUDSPETH COUNTY COURTHOUSE SITE IMPROVEMENTS
ADDRESS: 109 MILLICAN ST. SIERRA BLANCA, TX

THE STATE OF TEXAS
HUDSPETH COUNTY

PLANTING PLAN

LP-101

THIS DOCUMENT, WHETHER IN HARD OR DIGITAL IS COPYRIGHTED AND AN INSTRUMENT OF SERVICES IN RESPECT OF THE PROJECT FOR WHICH IT WAS PREPARED. THIS DOCUMENT IS NOT INTENDED OR AUTHORIZED FOR USE ON ANY OTHER PROJECT. NEITHER ALL OR ANY PART OF THIS DOCUMENT MAY BE REPRODUCED, DISTRIBUTED OR TRANSMITTED IN ANY FORM OR BY ANY MEANS, ELECTRONIC OR MECHANICAL, WITHOUT THE PRIOR WRITTEN PERMISSION OF DESIGN SCAPES FOR THE SPECIFIC PURPOSE INTENDED IS A VIOLATION OF FEDERAL COPYRIGHT LAW. UNAUTHORIZED USE OF THIS MATERIAL MAY RESULT IN CIVIL AND/OR CRIMINAL PENALTIES.

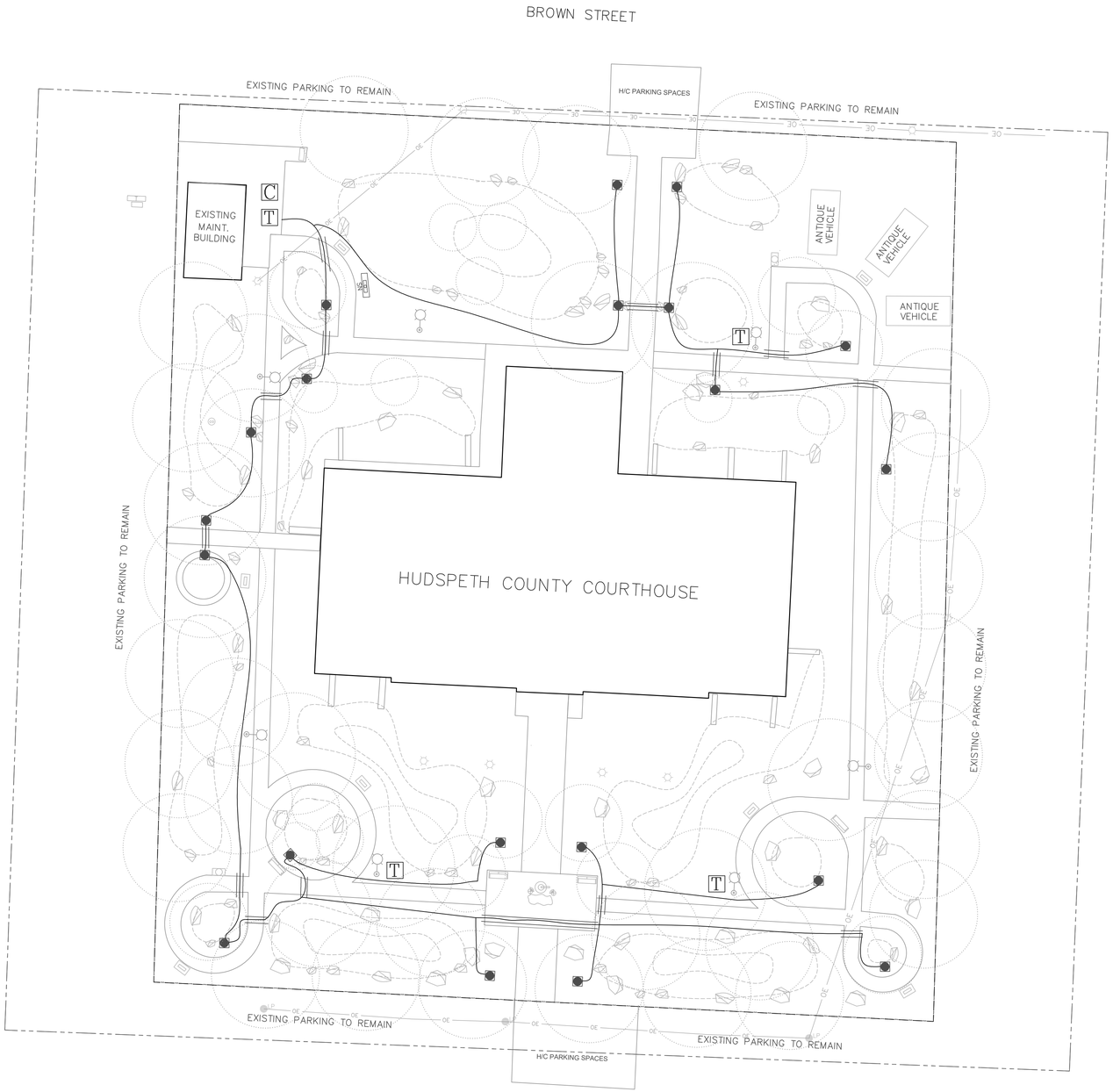

LOW-VOLTAGE LANDSCAPE LIGHTING PLAN

0 5 10 20
SCALE: 1"= 20'-0"

LEGEND.....GENERAL

- OE — EXISTING OVERHEAD ELECTRIC, SEE ELECTRICAL PLANS
- LP — EXISTING LIGHT FIXTURES AND LIGHT POLES, SEE ELECTRICAL PLANS
- EXISTING CONCRETE RUNNELS, PROTECT FROM DAMAGE.
- EXISTING CLEAN OUT, PROTECT FROM DAMAGE.
- EXISTING WATER FAUCET, PROTECT FROM DAMAGE.
- EXISTING WATER METER, PROTECT FROM DAMAGE.
- EXISTING WATER VALVE, PROTECT FROM DAMAGE.
- EXISTING SIGN, PROTECT FROM DAMAGE.
- EXISTING UTILITY BOXES, PROTECT FROM DAMAGE.
- PROPERTY LINE
- PROJECT LIMIITS
- FLAG POLE, SEE SHEET LC-101
- BENCH, SEE SHEET LC-101
- TRASH RECEPTACLE, SEE SHEET LC-101
- SIGN, SEE SHEET LC-101
- BUILDING NAME BOULDER, SHEET LC-101
- EXISTING TREE TO REMAIN, PROTECT FROM DAMAGE. SEE PROTECTION DETAIL A/LC-501.
- SWALES, DO NOT INSTALL DIRECT BURIAL WIRE WITHIN, ROUTE WIRE AROUND SWALES.
- BOULDERS, SEE SHEET LC-101
- NEW LINE VOLTAGE FIXTURES, SEE SHEET ESP-101
- MATURE TREE CANOPY: EXISTING AND PROPOSED TREES

LEGEND.....LOW_VOLTAGE_LANDSCAPE_LIGHTING

ALL ITEMS SHALL BE AS INDICATED OR APPROVED EQUAL

- T — PROVIDE AND INSTALL NEW WAC 9150-TRN-SS 150W 120V-12V TRANSFORMER, WITH PHOTOCELL , MIN. IP65, SEE DETAIL A/LL-501. SEE E-100 FOR ELECTRICAL POWER OUTLET.
- PROVIDE AND INSTALL NEW WAC GRAND INGROUND FIXTURE WITH ROCK GUARD, MODEL 5033-30-BBR 10 WATT MAX, IP65, SEE DETAIL B/LL-501
- PROVIDE AND INSTALL DIRECT BURIAL WIRE, MIN. 14 GA. USE ONLY WATERPROOF CONNECTORS, SEE DETAIL B/LL-501
- 2" PVC SCH 40 SLEEVING

NOTES

THE PLAN IS INTENDED FOR LOW-VOLTAGE LANDSCAPE LIGHTING PURPOSES ONLY. ALL LIGHTING FIXTURES AND TRANSFORMERS SHALL BE INSTALLED PER MANUFACTURER'S SPECIFICATIONS. IT IS THE THE CONTRACTOR'S RESPONSIBILITY TO MAINTAIN COMPLIANCE WITH ALL LOCAL BUILDING SAFETY CODES AND ORDINANCES.

FIXTURES ARE SHOWN IN APPROXIMATE LOCATIONS, CONTRACTOR SHALL MARK ALL LIGHT LOCATIONS, FIELD VERIFY AND CONTACT LANDSCAPE ARCHITECT IN WRITING FOR APPROVAL OF FIXTURE LOCATIONS PRIOR TO INSTALLATION.

TRANSFORMER PLUGGED INTO OUTDOOR RECEPTACLE SHALL HAVE AN "IN USE" COVER. CONTRACTOR SHALL INSTALL TAYMAC TYPE COVER AT OUTLET AND PLUG-IN TRANSFORMER SHALL HAVE A DRIP LOOP IN THE POWER CORD.

PROVIDE DIRECT BURIAL WIRE AND WATER-TIGHT CONNECTIONS AT ALL WIRE SPLICES AND AT FIXTURES. ALL UNDERGROUND SPLICES SHALL BE UL-486 RATED AND INSTALLED IN UNDERGROUND J-BOXES WITH WATER TIGHT CONNECTIONS LEAVING 12 INCHES OF EXCESS WIRE SLACK.

INSTALL LOW VOLTAGE WIRE IN SEPARATE TRENCH FROM IRRIGATION PIPE AND LINE VOLTAGE WIRE A MINIMUM 12" FROM OTHER TRENCHES. SEE DETAIL C/LI-501. ALL WIRE UNDER HARD SURFACES SHALL BE SLEEVED.

CONTRACTOR SHALL NOT INSTALL FIXTURES OR LOW VOLTAGE WIRE IN SWALES.

CONTRACTOR SHALL BE RESPONSIBLE FOR ADJUSTING THE FIXTURES AT NIGHT TO ENSURE THE WELL LIGHTS ARE SHINING ON TREE TRUNK AND INTO CANOPY HIGHLIGHTING BRANCHING STRUCTURE OF TREE.

CONTRACTOR SHALL FURNISH ALL WARRANTY INFORMATION TO CLIENT AND COMPLETE AN INFORMATIONAL AND MAINTENANCE MEETING WITH CLIENT'S REPRESENTATIVE AT COMPLETION OF PROJECT, PRIOR TO FINAL ACCEPTANCE.

FINAL FOR CONSTRUCTION

DESIGN FIRM
DesignScapes
DESIGN : CONSULTING
P.O. BOX 290544 EL PASO, TX 79929
EMAIL: PH : 915.497.1944
DESIGNSCAPESCONSULTING@GMAIL.COM

SEAL
REGISTERED LANDSCAPE ARCHITECT
DEBORAH A. BLEA
3007
STATE OF TEXAS
6·16·25

HORIZ. SCALE: AS INDICATED
VERT. SCALE: AS INDICATED
DATE: JUNE 2025
DESIGNED BY: DEBORAH BLEA
DRAWN BY: STAFF
CHECKED BY: DEBORAH BLEA
APPROVED BY: DEBORAH BLEA
JOB NAME: HCC SITE IMP

△ REVISIONS
1. 2. 3. 4. 5. 6. 7. 8.

PROJECT
NAME: HUDSPETH COUNTY COURTHOUSE SITE IMPROVEMENTS
ADDRESS: 109 MILLICAN ST. SIERRA BLANCA, TX

THE STATE OF TEXAS
HUDSPETH COUNTY

LANDSCAPE LIGHTING PLAN

LL-101

THIS DOCUMENT, WHETHER IN HARD OR DIGITAL IS COPYRIGHTED AND AN INSTRUMENT OF SERVICES IN RESPECT OF THE PROJECT FOR WHICH IT WAS PREPARED. THIS DOCUMENT IS NOT INTENDED OR AUTHORIZED FOR REUSE BY ANY PARTY ON EXTENSIONS OF SUCH PROJECT OR ANY OTHER PROJECT. ANY REUSE, INCLUDING COPYING AND/OR MODIFYING THE DOCUMENT, WITHOUT WRITTEN PERMISSION OF DESIGN SCAPES FOR THE SPECIFIC PURPOSE INTENDED IS A VIOLATION OF FEDERAL COPYRIGHT LAW. UNAUTHORIZED USE OF THIS MATERIAL MAY RESULT IN CIVIL AND/OR CRIMINAL PENALTIES..

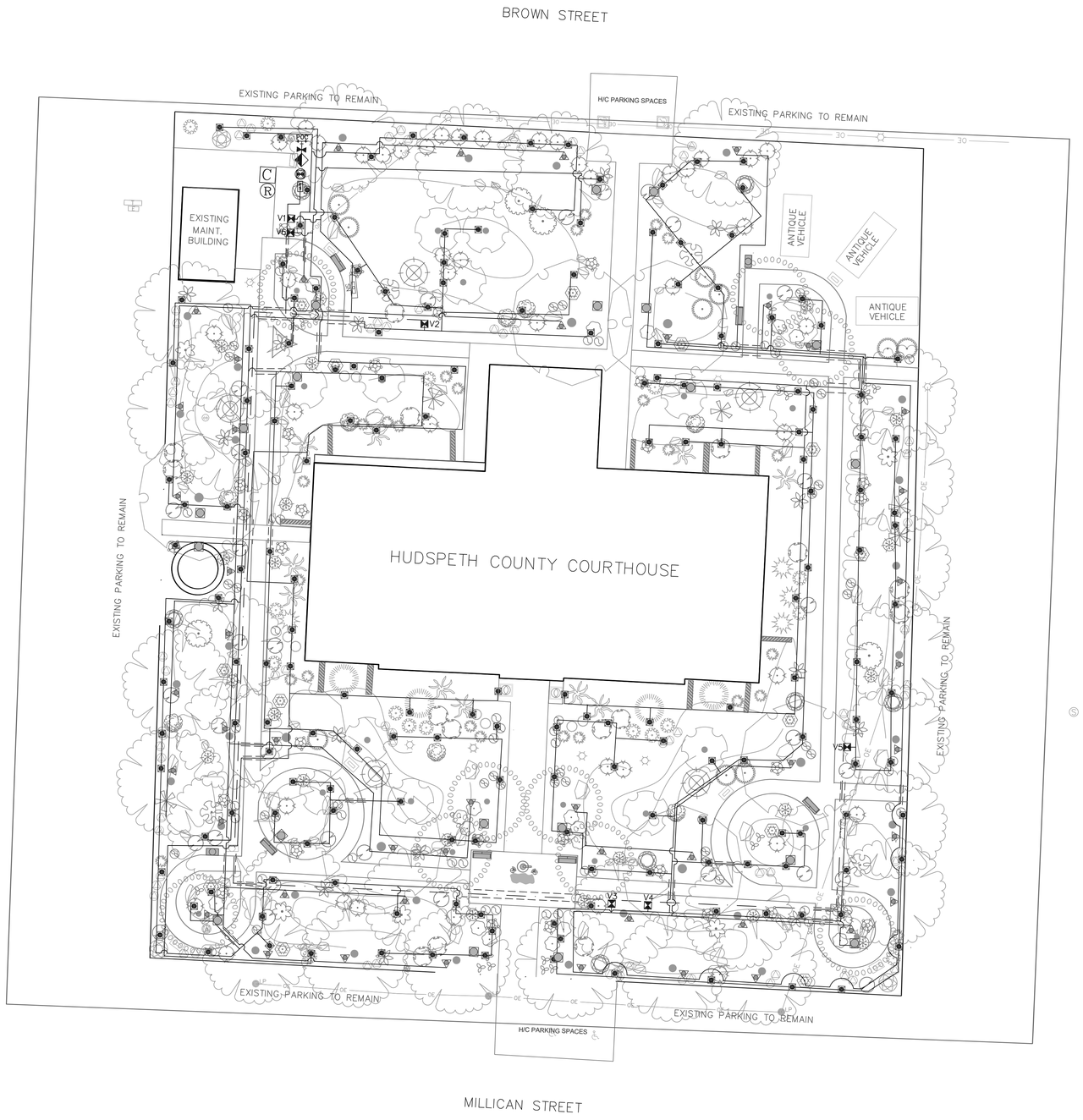

IRRIGATION PLAN

SCALE: 1"= 20'-0"

LEGEND.....GENERAL

- PROPERTY LINE
- PROJECT LIMIITS
- EXISTING OVERHEAD ELECTRIC, SEE E-101
- EXISTING LIGHT FIXTURES/LIGHT POLES, SEE E-101
- EXISTING CONCRETE FLUMES, PROTECT FROM DAMAGE.
- EXISTING CLEAN OUT, PROTECT FROM DAMAGE.
- EXISTING WATER FAUCET, PROTECT FROM DAMAGE.
- EXISTING WATER METER, PROTECT FROM DAMAGE.
- EXISTING WATER VALVE, PROTECT FROM DAMAGE.
- EXISTING SIGN, PROTECT FROM DAMAGE.
- EXISTING UTILITY BOXES, PROTECT FROM DAMAGE.
- FLAG POLE
- BENCH
- TRASH RECEPTACLE
- SIGN
- BUILDING NAME BOULDER
- PROVIDE AND INSTALL PLANTER WITH INDICATED PLANT, SEE DETAIL C/LP-501
- BOULDERS, SEE LC-101
- LANDSCAPE LIGHTING, SEE LL-101
- EXISTING TREE TO REMAIN, INSTALL TREE IRRIGATION AS INDICATED AND PROTECT ROOTS FROM DAMAGE, SEE TREE PROTECTION DETAIL A/LC-501.
- SWALE, ROUTE LINES OUTSIDE OF SWALES, INSTALL DRAINS INTO SWALES WHERE LINES END AT A SWALE.

IRRIGATION LEGEND

COMPONENTS SHALL BE AS SPECIFIED OR APPROVED EQUAL.

- POC — POINT OF CONNECTION. CONTRACTOR SHALL FIELD LOCATE EXISTING POTABLE WATER LINE AND INSTALL BACKFLOW AND OTHER COMPONENTS AS INDICATED.
- C — PROVIDE AND INSTALL EXTERIOR GRADE RAINBIRD ESP-ME3 CONTROLLER WITH RAIN BIRD LNK2 WiFi MODULE. SEE DETAIL A/LI-501
- R — PROVIDE AND INSTALL RAIN BIRD WR2-RFC RAIN SENSOR, SEE DETAIL B/LI-502.
- PROVIDE AND INSTALL FEBCO 1" 825Y REDUCED PRESSURE ZONE ASSSEMBLY. PROVIDE STAINLESS STEEL INSULATED COVER, SEE DETAIL B/LI-501.
- PROVIDE AND INSTALL WATTS HEAVY DUTY BRASS BALL (ISOLATION) VALVE, OR APPROVED EQUAL, SIZE SHALL MATCH MAIN LINE SIZE. SEE DETAIL D/LI-501.
- PROVIDE AND INSTALL MASTER VALVE, RAIN BIRD EFB-CP IVM. SEE DETAIL A/LI-502.
- PROVIDE AND INSTALL FLOW SENSOR, RAIN BIRD FG100, INSTALL PER MANUFACTURER'S RECOMMENDATION.
- PROVIDE AND INSTALL DRIP VALVE RAIN BIRD 1" VALVE KIT, XCZ100PRBCOM WIDE FLOW LIGHT COMMERCIAL CONTROL ZONE KIT WITH 40 PSI BASKET FILTER. PROVIDE CARSON JUMBO BOX WITH LOCKING COVER, BOX & COVER COLOR TO MATCH FINISH MATERIAL. SEE DETAIL C/LI-501.
- PROVIDE AND INSTALL RAIN BIRD EMT-6XERI: 6 OUTLET MANIFOLD WITH PRESSURE COMPENSATING 2.0 GPH XERI-BUG EMITTER. PROVIDE ONE (1) PER 1 GALLON PLANT, TWO (2) PER 5 GALLON PLANT AND SIX PER 15 GALLON PLANT AND ONE PER ACCENT PLANT. SEE DETAIL D/LI-502
- PROVIDE AND INSTALL TWO (2) RAIN BIRD EMT-6XERI: 6 MULTI-OUTLET DRIP EMISSION DEVICE WITH SIX (6) PRESSURE COMPENSATING 2.0 GPH EMITTERS FOR EACH NEW 2" CAL. TREE AND FOR THE EXISTING LIVE OAK, EVENLY SPACE DRIP LINES AROUND THE BASE OF THE CANOPY OF THE EXISTING LIVE OAK TREE. SEE DETAIL D/LI-502
- 1" PVC SCHEDULE 40 IPS PIPE MAIN LINE, 18" DEPTH OF BURY, SEE DETAIL C/LI-502.
- PVC CLASS 200 LATERAL PIPE – ALL PIPE SHALL BE 3/4" UNLESS OTHERWISE SPECIFIED. 12" DEPTH OF BURY, SEE DETAIL C/LI-502.
- PVC SCHEDULE 40 SLEEVING, CONTRACTOR TO PROVIDE SLEEVING UNDER ALL PAVED SURFACES. PROVIDE SUFFICIENT NUMBER TO ALLOW TOTAL PIPING DIAMETER IN SLEEVE TO BE TWO (2) SIZES LARGER THAN THE SUM OF THE TOTAL DIAMETER OF THE PIPE HOUSED WITHIN. CONTROL WIRE SHALL BE IN SEPARATE 2" DIA. SLEEVE. SEE DETAIL C/LI-502.

IRRIGATION NOTES

ADDITIONAL IRRIGATION NOTES AND RECOMMENDED WATERING SCHEDULE ON SHEET LI-501.

1. THIS IS A PUBLIC FACILITY. CONTRACTOR SHALL PROVIDE 48 HOUR WRITTEN NOTICE PRIOR TO TURNING OFF WATER AND RECEIVE WRITTEN APPROVAL BEFORE TURNING OFF WATER TO MAKE IRRIGATION SYSTEM CONNECTION. IDEALLY CONTRACTOR SHALL PLAN IRRIGATION SYSTEM CONNECTION AFTER BUILDING'S HOURS AND UNDER NO CIRCUMSTANCES WHILE COURT IS IN SESSION.
2. THIS IRRIGATION DESIGN (LINES & COMPONENTS) IS DIAGRAMMATIC. ALL EQUIPMENT SHOWN IN PAVED AREA IS FOR DESIGN CLARITY ONLY AND SHALL BE INSTALLED IN LANDSCAPE AREAS. CONSTRUCTED ELEMENTS, SWALES, SITE FURNNITURE AND OBSTRUCTIONS WHETHER NOTED ON THE PLANS OR NOT SHALL BE AVOIDED TO MINIMIZE SLEEVING. ACTUAL ALIGNMENTS TO BE LOCATED AS PER NOTES OR AS PER APPROVED IN FIELD BY LANDSCAPE ARCHITECT.
3. PROVIDE AND INSTALL AIR RELEASE VALVE AT HIGH POINT OF MAIN LINE AND EACH LATERAL LINE AND DRAIN CHECK VALVE AT LOW POINT OF MAIN LINE AND EACH LATERAL LINE. DRAIN CHECK VALVE SHALL BE LOCATED SO THEY DRAIN INTO ADJACENT SWALE.
4. INSTALL EMITTERS ON THE UPHILL SIDE OF EACH PLANT. WHERE TREES ARE INSTALLED, INSTALL EMITTERS ON THE TOP HALF OF THE TREE'S ROOTBALL. EMITTER OUTLETS SHALL BE LOCATED OVER THE ROOTBALL IN ALL CASES.
5. PROVIDE AND INSTALL BUG CAPS AND STAKES AS INDICATED ON DETAIL D/LI-502.
6. PROVIDE AND INSTALL DRIP FLAG EMITTER AT THE END OF EACH DRIP LINE.

VALVE SCHEDULE

V#
#" #
XXXX

- VALVE NUMBER
- TOTAL VALVE GPM
- VALVE SIZE
- VALVE TYPE

V1	V2	V3	V4	V5	V6
1" 10.4	1" 17.2	1" 8.4	1" 9.2	1" 14.2	1" 3.6
TREES	SHRUBS	TREES	SHRUBS	SHRUBS	ACCENT

FINAL FOR CONSTRUCTION

DESIGN FIRM
DesignScapes
DESIGN : CONSULTING
P.O. BOX 290544 EL PASO, TX 79929
EMAIL: PH : 915.497.1944
DESIGNSCAPESCONSULTING@GMAIL.COM

SEAL
STATE OF TEXAS
DEBORAH A. BLEA
14746
LICENSED LANDSCAPE ARCHITECT
6·16·25

HORIZ. SCALE: AS INDICATED
VERT. SCALE: AS INDICATED
DATE: JUNE 2025
DESIGNED BY: DEBORAH BLEA
DRAWN BY: STAFF
CHECKED BY: DEBORAH BLEA
APPROVED BY: DEBORAH BLEA
JOB NAME: HCC SITE IMP

△ REVISIONS
1.
2.
3.
4.
5.
6.
7.
8.

PROJECT
NAME: HUDSPETH COUNTY COURTHOUSE SITE IMPROVEMENTS
ADDRESS: 109 MILLICAN ST. SIERRA BLANCA, TX

THE STATE OF TEXAS HUDSPETH COUNTY

IRRIGATION PLAN

LI-101

THIS DOCUMENT, WHETHER IN HARD OR DIGITAL IS COPYRIGHTED AND AN INSTRUMENT OF SERVICES IN RESPECT OF THE PROJECT FOR WHICH IT WAS PREPARED. THIS DOCUMENT IS NOT INTENDED OR AUTHORIZED FOR REUSE BY ANY PARTY ON EXTENSIONS OF SUCH PROJECT OR ANY OTHER PROJECT. ANY REUSE, INCLUDING COPYING AND/OR MODIFYING THE DOCUMENT, WITHOUT WRITTEN PERMISSION OF DESIGN SCAPES FOR THE SPECIFIC PURPOSE INTENDED IS A VIOLATION OF FEDERAL COPYRIGHT LAW. UNAUTHORIZED USE OF THIS MATERIAL MAY RESULT IN CIVIL AND/OR CRIMINAL PENALTIES.

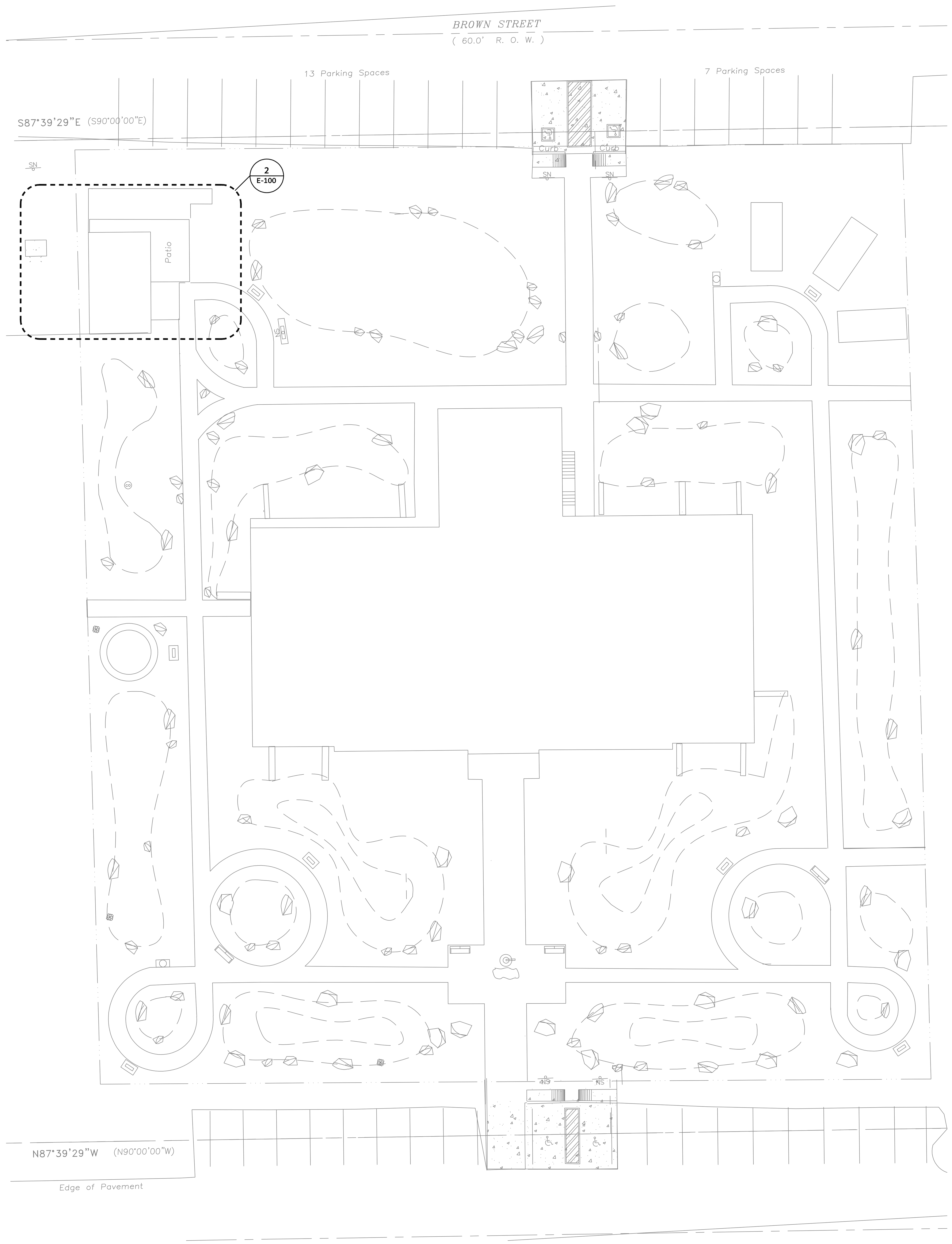

1 E-100 **ELECTRICAL SITE PLAN**

Scale: 1" = 20'

GENERAL NOTES

1. REFER TO ELECTRICAL GENERAL NOTES AND ELECTRICAL LEGEND FOR ADDITIONAL INFORMATION.

KEYED NOTES

(1) EXISTING PANEL "A" IS A 120/208V 3Ø, 4W, 400 AMP G.E. PANELBOARD. CONTRACTOR SHALL UTILIZE EXISTING SPARE 20A/1P BREAKERS IN EXISTING PANEL "A" TO ACCOMMODATE IRRIGATION CONTROL RECEPTACLE CIRCUIT. UPDATE PANEL DIRECTORY.

(2) CONTRACTOR SHALL INSTALL CONDUIT ALONG WALL ON UNISTRUT SUPPORT.

(3) 2#12, 1#12G IN 1/2"C. CONNECT TO SPARE 20A/1P BREAKER IN EXISTING PANEL "A".

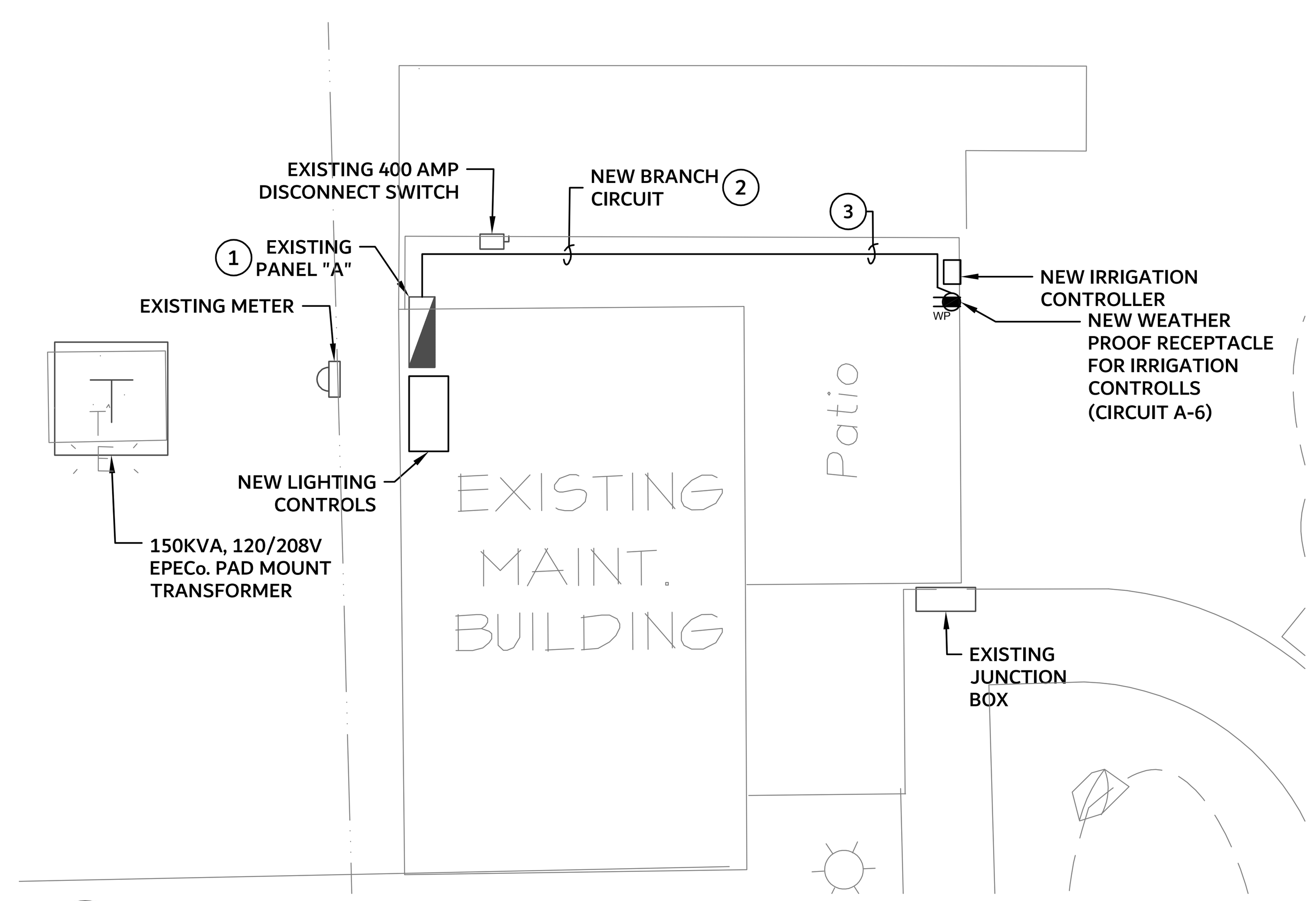

2 E-100 **PARTIAL ENLARGED ELECTRICAL PLAN**

Scale: 1/8" = 1'-0"

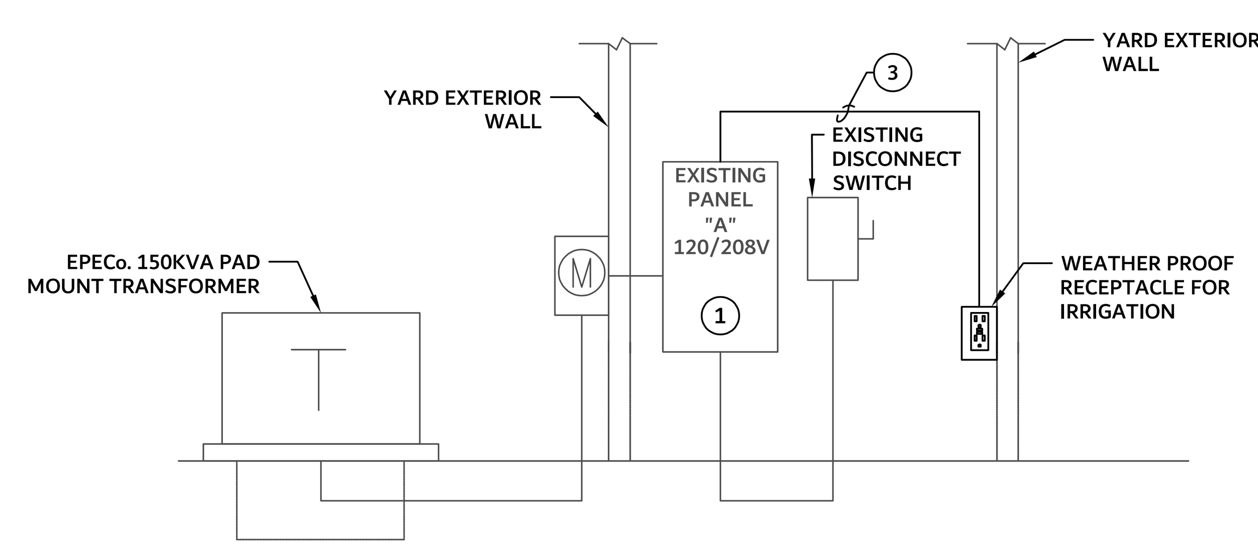

3 E-100 **POWER RISER DIAGRAM**

Scale: NONE

DESIGN FIRM

DesignScapes
DESIGN : CONSULTING
P.O. BOX 290544 : EL PASO, TX 79929
PH : 915.497.1944
EMAIL: DESIGNSCAPESCONSULTING@GMAIL.COM

SEAL

STATE OF TEXAS
LORENZO L. DE SANTIAGO
90120
LICENSED
PROFESSIONAL ENGINEER
6/20/25

THIS SEAL APPEARING ON THIS DOCUMENT WAS AUTHORIZED BY LORENZO L. DE SANTIAGO, P.E. #90120 ON JUNE 20, 2025. ALTERATION OF A SEALED DOCUMENT WITHOUT PROPER NOTIFICATION TO THE RESPONSIBLE ENGINEER IS AN OFFENSE UNDER THE TEXAS ENGINEERING PRACTICE ACT.

DSE NGINEERING PLLC
2150 TRAWOOD Dr., Ste. B251, EL PASO, TX 79935
O:(915)444-8519 C:(915)867-4041,FIRM No: F-16861

HORIZ. SCALE: AS INDICATED
VERT. SCALE: AS INDICATED
DATE: 06/20/2025
DESIGNED BY: L.D.S.
DRAWN BY: R.E.
CHECKED BY: L.D.S.
APPROVED BY: L.D.S.
JOB NAME: HCC SITE IMP

△ REVISIONS
1.
2.
3.
4.
5.
6.
7.
8.

PROJECT
NAME: HUDSPETH COUNTY COURTHOUSE SITE IMPROVEMENTS
ADDRESS: 109 MILLICAN ST. SIERRA BLANCA, TX

THE STATE OF TEXAS
HUDSPETH COUNTY

ELECTRICAL SITE PLAN

BASE BID
E-100

THIS DOCUMENT, WHETHER IN HARD OR DIGITAL IS COPYRIGHTED AND AN INSTRUMENT OF SERVICES IN RESPECT OF THE PROJECT FOR WHICH IT WAS PREPARED. THIS DOCUMENT IS NOT INTENDED OR AUTHORIZED FOR REUSE BY ANY PARTY ON EXTENSIONS OF SUCH PROJECT OR ANY OTHER PROJECT. ANY REUSE, INCLUDING COPYING AND/OR MODIFYING THE DOCUMENT, WITHOUT WRITTEN PERMISSION OF DESIGN SCAPES FOR THE SPECIFIC PURPOSE INTENDED IS A VIOLATION OF FEDERAL COPYRIGHT LAW. UNAUTHORIZED USE OF THIS MATERIAL MAY RESULT IN CIVIL AND/OR CRIMINAL PENALTIES.

NOTE: ALL UNDERGROUND ELECTRICAL CONDUIT SHALL BE ROUTED MINIMUM 3 FEET FROM ANY SWAILS. REFER TO LANDSCAPING AND GRATING PLAN FOR SWAIL LOCATIONS.

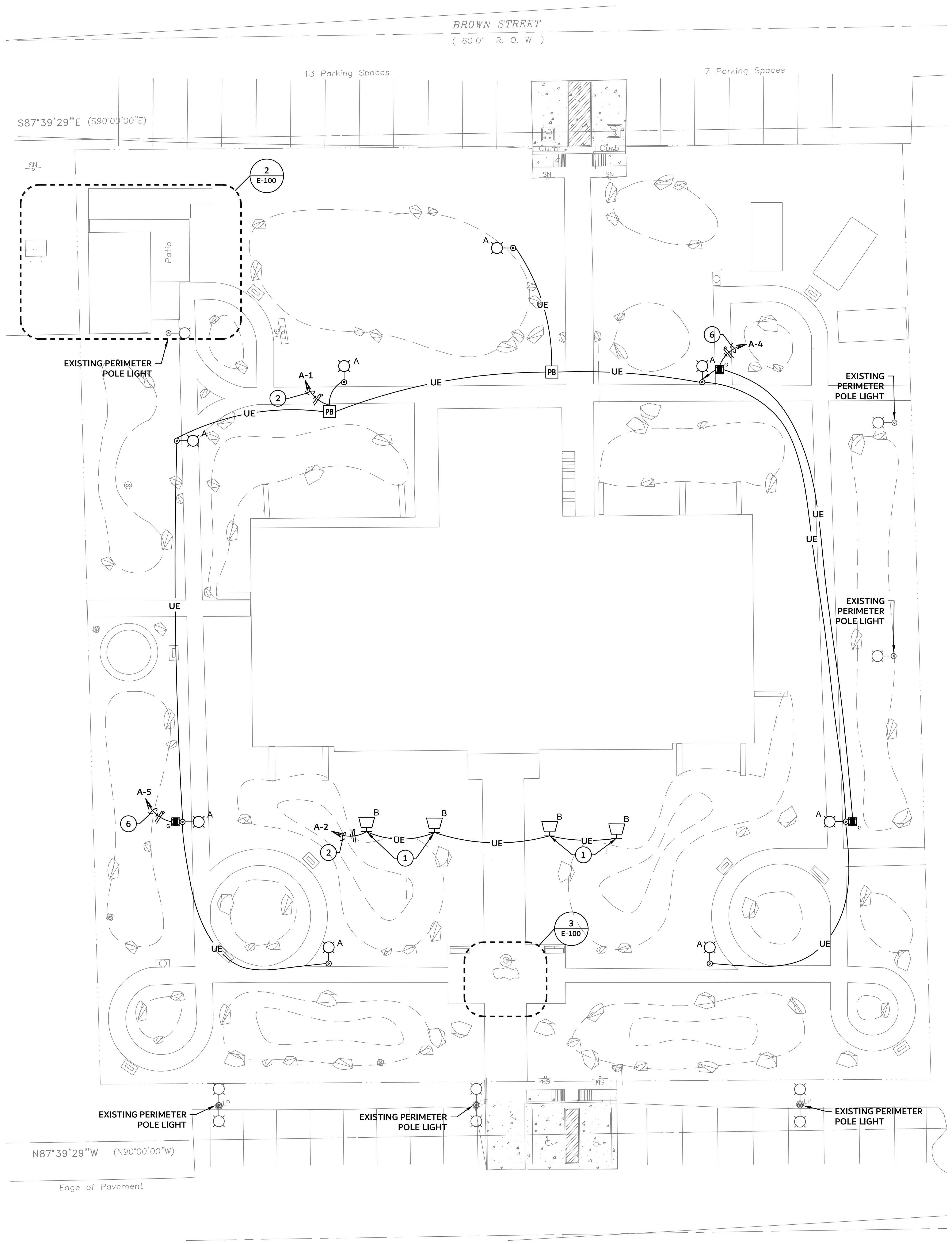

1 ELECTRICAL SITE PLAN
E-101 Scale: 1" = 20'

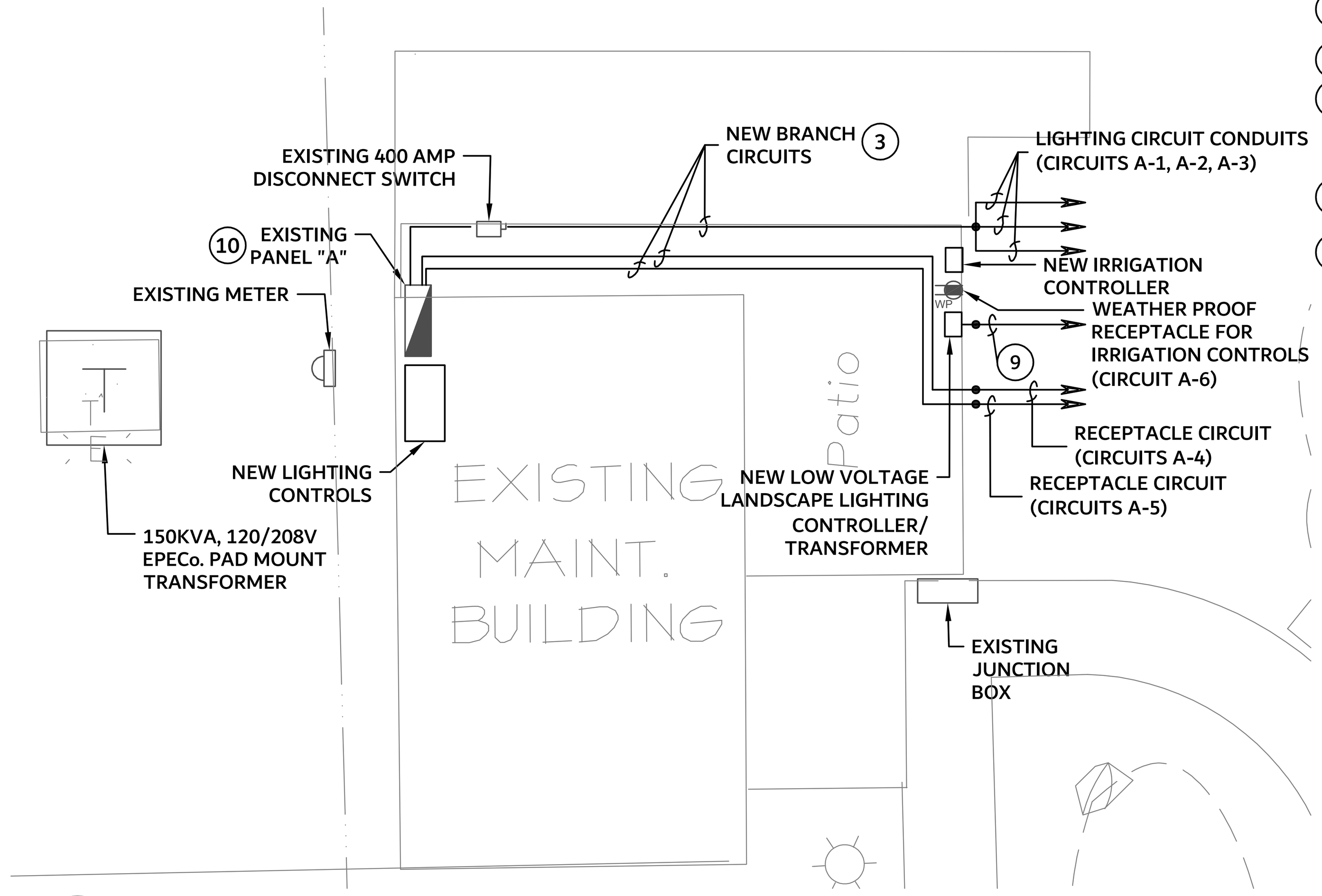

2 PARTIAL ENLARGED ELECTRICAL PLAN
E-101 Scale: 1/8" = 1'-0"

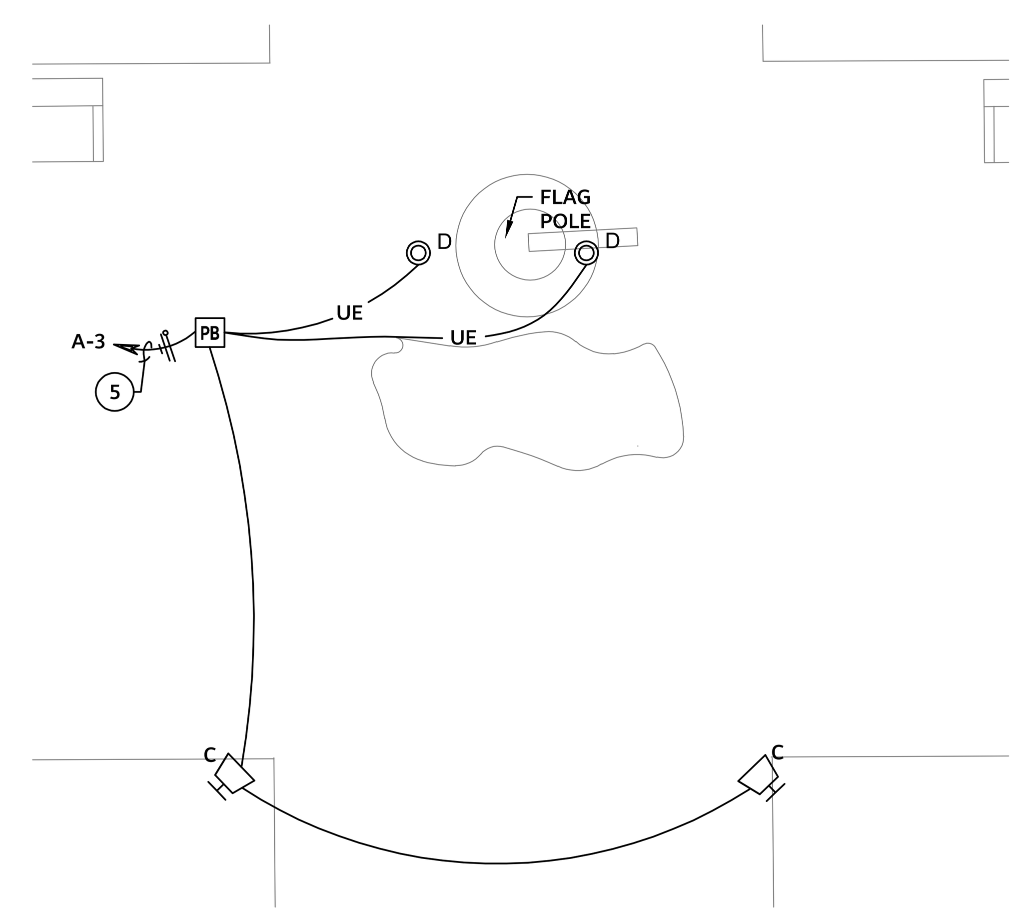

3 FLAG POLE & BOULDER SIGN LIGHTING PLAN
E-101 Scale: 1/4" = 1'-0"

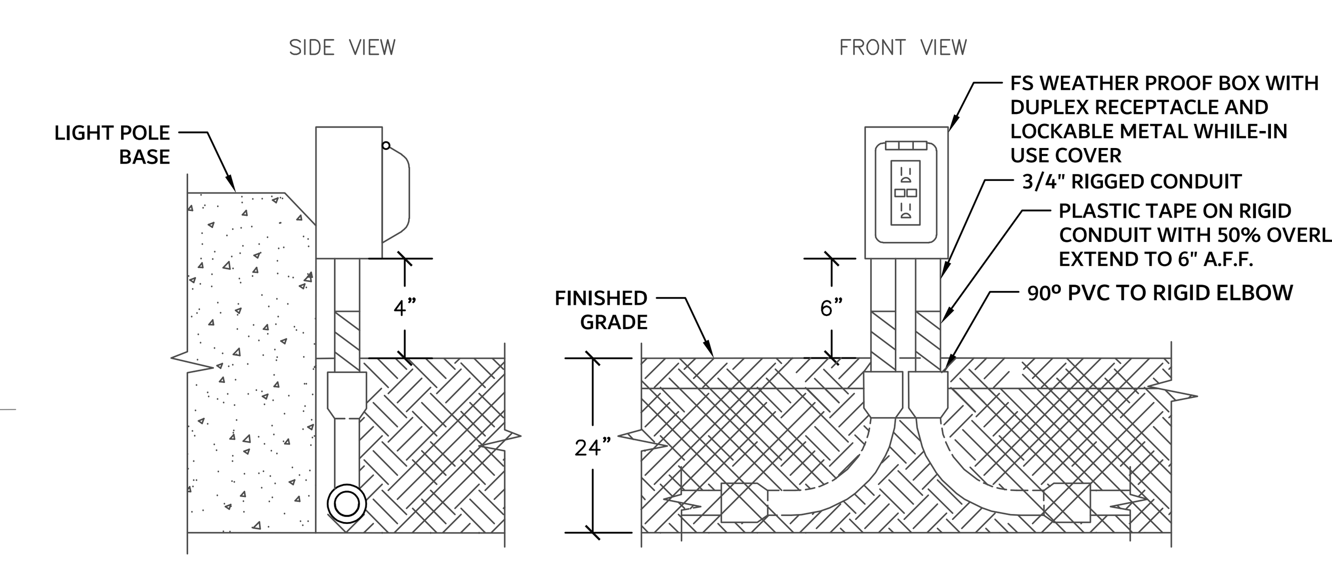

5 GROUND MOUNTED RECEPTACLE INSTALLATION DETAIL
E-101 Scale: NONE
SHOWN ON ELECTRICAL DRAWINGS AS:

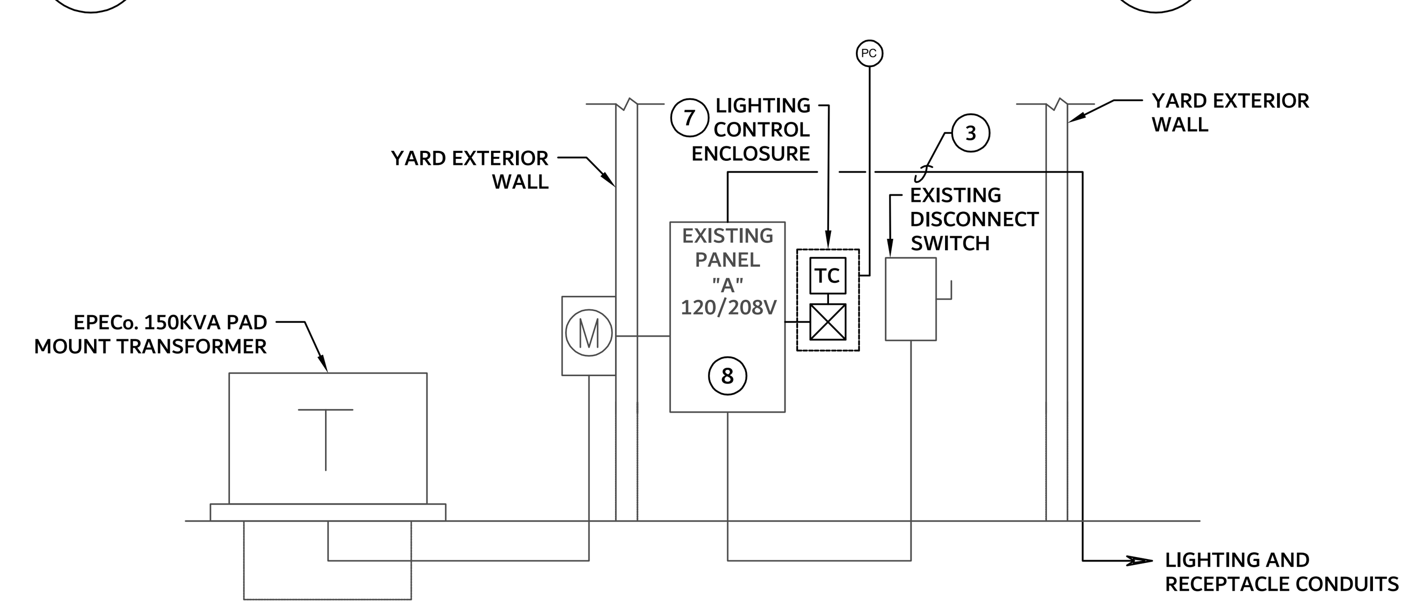

4 POWER RISER DIAGRAM
E-101 Scale: NONE

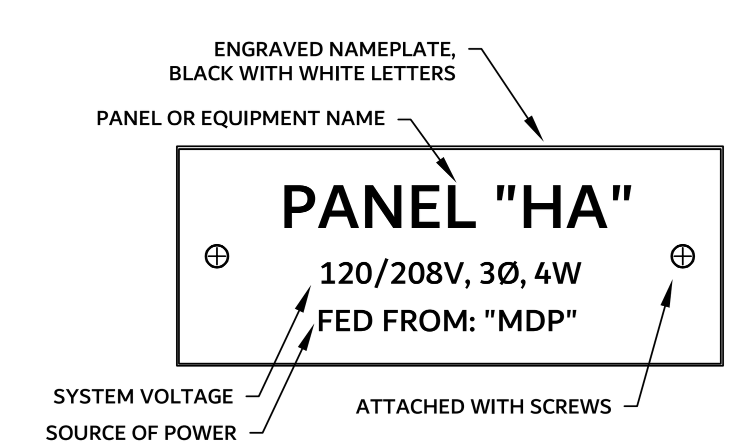

6 TYPICAL ELECTRICAL EQUIPMENT LABELING DETAIL
E-101 Scale: NONE

GENERAL NOTES

1. REFER TO ELECTRICAL GENERAL NOTES AND ELECTRICAL LEGEND FOR ADDITIONAL INFORMATION.

KEYED NOTES

1. CONTRACTOR SHALL INTERCEPT EXISTING CONDUIT AND EXTEND NEW CONDUIT WITH POWER & CONTROL WIRING AS REQUIRED TO ACCOMMODATE REPLACEMENT OF FIXTURES AND RE-USE EXISTING CONCRETE BASE AND CONDUIT STUB-UPS. REPLACE GASKETS ON EXISTING 4X4 WEATHER PROOF BOX AND RE-USE TO INSTALL NEW FLOOD LIGHT. REPLACE EXISTING 4X4 WEATHER PROOF BOX IF NOT RE-USABLE. MAKE ALL CONNECTIONS FOR PROPER OPERATION
2. 2#10, 1#10G (SWITCHED POWER), 2#12 (CONTROL) IN 1"C. CONTROL CONDUCTORS TO BE 300V RATED CONDUCTORS. REFER TO LIGHTING CONTROL DIAGRAM.
3. CONTRACTOR SHALL INSTALL CONDUITS ALONG WALL ON UNISTRUT SUPPORT.
4. 2#12, 1#12G IN 1/2"C. CONNECT TO SPARE 20A/1P BREAKER IN EXISTING PANEL "A".
5. 4#10, 1#10G (SWITCHED POWER) 4#12 (CONTROL) IN 1"C. CONTROL CONDUCTORS TO BE 300 VOLT RATED. REFER TO "LIGHTING CONTROL DIAGRAM".
6. 2#10, 1#10G IN 3/4"C. EXTEND TO SPARE BREAKER IN EXISTING PANEL "A".
7. REFER TO "SITE LIGHTING CONTROL DIAGRAM" FOR REQUIREMENTS.
8. EXISTING PANEL "A" IS A 120/208V 3Ø, 4W, 400 AMP G.E. PANELBOARD. CONTRACTOR SHALL UTILIZE EXISTING SPARE 20A/1P BREAKERS IN EXISTING PANEL "A" TO ACCOMMODATE NEW LIGHTING CIRCUITS AND LOW VOLTAGE LIGHTING CIRCUITS. UPDATE PANEL DIRECTORY.
9. 1"C THRU EXISTING WALL STUBBED OUT 12" BEYOND WALL. TO BE USED FOR LOW VOLTAGE LIGHTING CABLES.
10. REFER TO POWER RISER DIAGRAM FOR WORK REQUIRED ON THIS PANEL.

DESIGN FIRM
DesignScapes
DESIGN : CONSULTING
P.O. BOX 290544 : EL PASO, TX 79929
PH : 915.497.1944
EMAIL: DESIGNSCAPESCONSULTING@GMAIL.COM

SEAL
STATE OF TEXAS
LORENZO L. DE SANTIAGO
90120
LICENSED PROFESSIONAL ENGINEER
6/20/25

THIS SEAL APPEARING ON THIS DOCUMENT WAS AUTHORIZED BY LORENZO L. DE SANTIAGO, P.E. #90120 ON JUNE 20, 2025. ALTERATION OF A SEALED DOCUMENT WITHOUT PROPER NOTIFICATION TO THE RESPONSIBLE ENGINEER IS AN OFFENSE UNDER THE TEXAS ENGINEERING PRACTICE ACT.

DSE NGINEERING PLLC
2150 TRAWOOD Dr., Ste. B251, EL PASO, TX 79935
O:(915)444-8519 C:(915)867-4041,FIRM No: F-16861

HORIZ. SCALE: AS INDICATED
VERT. SCALE: AS INDICATED
DATE: 06/20/2025
DESIGNED BY: L.D.S.
DRAWN BY: R.E.
CHECKED BY: L.D.S.
APPROVED BY: L.D.S.
JOB NAME: HCC SITE IMP

△ REVISIONS
1.
2.
3.
4.
5.
6.
7.
8.

PROJECT
NAME: HUDSPETH COUNTY COURTHOUSE SITE IMPROVEMENTS
ADDRESS: 109 MILLICAN ST. SIERRA BLANCA, TX

THE STATE OF TEXAS · HUDSPETH COUNTY

ELECTRICAL SITE PLAN

ALTERNATE 1
E-101

THIS DOCUMENT, WHETHER IN HARD OR DIGITAL IS COPYRIGHTED AND AN INSTRUMENT OF SERVICES IN RESPECT OF THE PROJECT FOR WHICH IT WAS PREPARED. THIS DOCUMENT IS NOT INTENDED OR AUTHORIZED FOR REUSE BY ANY PARTY ON EXTENSIONS OF SUCH PROJECT OR ANY OTHER PROJECT. ANY REUSE, INCLUDING COPYING AND/OR MODIFYING THE DOCUMENT, WITHOUT WRITTEN PERMISSION OF DESIGN SCAPES FOR THE SPECIFIC PURPOSE INTENDED IS A VIOLATION OF FEDERAL COPYRIGHT LAW. UNAUTHROIZED USE OF THIS MATERIAL MAY RESULT IN CIVIL AND/OR CRIMINAL PENALTIES..

ELECTRICAL GENERAL NOTES

1. BEFORE SUBMITTING BIDS, THE CONTRACTOR SHALL VISIT THE SITE AND EXAMINE ALL EXISTING BUILDINGS, EQUIPMENT, AND SPACE CONDITIONS AFFECTED BY THE SCOPE OF WORK AND INCLUDE IN THE BID ALL COSTS FOR LABOR, MATERIALS, TESTING, AND TRAINING FOR WORK REQUIRED WITHIN THE SCOPE OF WORK. CONTRACTOR SHALL REPORT TO THE ARCHITECT/ENGINEER ANY CONDITION WHICH MIGHT AFFECT THE BID TEN BUSINESS DAYS PRIOR TO SUBMISSION OF BIDS. NO CHANGE IN CONTRACT PRICE WILL BE ALLOWED FOR FAILURE TO VISIT THE SITE, NOR FOR ANY MISUNDERSTANDING OF MATERIALS TO BE FURNISHED OR WORK TO BE PERFORMED AS REQUIRED BY CONTRACT DOCUMENTS AND SPECIFICATIONS.
2. INSTALLATION OF ALL WORK SHALL BE IN ACCORDANCE WITH THE FOLLOWING REGULATIONS, CODES, ETC.
   A. LOCAL CODES AND ORDINANCES.
   B. THE 2020 EDITION OF THE NATIONAL ELECTRICAL CODE.
   C. THE 2021 EDITION OF THE INTERNATIONAL ENERGY CONSERVATION CODE.
   D. THE 2021 EDITION OF THE INTERNATIONAL BUILDING CODE.
3. PROVIDE ALL LABOR AND MATERIALS FOR A COMPLETE INSTALLATION. WORK SHALL BE EXECUTED BY EXPERIENCED ELECTRICIANS WHO ARE LICENSED IN THE JURISDICTION WHERE THE PROJECT IS LOCATED.
4. WHERE LIGHT FIXTURES, ELECTRICAL DEVICES, SWITCHES, T-STATS, ELECTRICAL EQUIPMENT, ETC. ARE SCHEDULED OR NOTED TO BE REMOVED, THE CONTINUITY OF ALL EXISTING CIRCUITS IN WHICH SUCH DEVICES ARE CONNECTED TO SHALL REMAIN ACTIVE. MODIFY/EXTEND CONDUIT AND WIRING AS REQUIRED TO MAINTAIN EXISTING CIRCUITS ACTIVE.
5. THE ELECTRICAL PLANS ARE DIAGRAMMATIC ONLY. COORDINATE ELECTRICAL EQUIPMENT LOCATION AND INSTALLATION WITH EQUIPMENT BEING SERVED. PROVIDE ALL CONDUIT, WIRE, OUTLET BOXES, CONNECTIONS AND RECEPTACLE/PLUGS AS REQUIRED FOR A COMPLETE AND FUNCTIONAL SYSTEM.
6. ALL EQUIPMENT SUCH AS RELAYS, SWITCHES, PANELS, AND OTHER APPURTENANCES SHALL HAVE ENGRAVED IDENTIFICATION PLATES OF BLACK LAMINATED PLASTIC WITH 1/2" WHITE LETTERS. ALL JUNCTION BOXES IN CEILING CAN BE MARKED WITH BLACK PERMANENT MARKER ON COVER PLATES AS PANEL DESIGNATION AND CIRCUIT NUMBER FROM WHICH THEY ARE FED.
7. ALL CONDUCTORS SHALL BE IDENTIFIED. ALL WIRING DEVICES SHALL HAVE ENGRAVED COVER PLATE IDENTIFYING THE PANEL DESIGNATION AND CIRCUIT NUMBER FROM WHICH THEY ARE FED.
8. ALL ELECTRICAL SYSTEMS SHALL BE GROUNDED PER ARTICLE 250 OF THE NATIONAL ELECTRICAL CODE.
9. MATERIAL OR EQUIPMENT INSTALLED BEFORE IT IS APPROVED, THE CONTRACTOR SHALL BE LIABLE FOR ITS REMOVAL AND REPLACEMENT AT NO ADDITIONAL COST TO THE OWNER.
10. THE CONTRACTOR SHALL INCLUDE IN THE WORK, ALL LABOR, MATERIALS, SERVICES, APPARATUS AS REQUIRED TO COMPLY WITH ALL APPLICABLE CODES AND A FULLY FUNCTIONAL SYSTEM/INSTALLATION.
11. PROVIDE ALL ELECTRICAL EQUIPMENT WITH ALL NECESSARY ASSOCIATED CONDUIT, WIRING, CONTROLS, ACCESSORIES, CONNECTIONS, AND TESTING AS REQUIRED TO ENSURE A COMPLETE AND OPERATIONAL SYSTEM.
12. THE CONTRACTOR SHALL NOTIFY THE ARCHITECT/ENGINEER IN WRITING OF ANY DISCOVERED CONFLICTS BETWEEN EXISTING INSTALLATIONS WHICH ARE NOT SCHEDULED FOR DEMOLITION AND THE NEW WORK INDICATED WITHIN THE CONTRACT DOCUMENTS. SUCH NOTIFICATION SHALL BE ACCOMPANIED BY A DRAWING DELINEATING THE PROPOSED SOLUTION PRIOR TO STARTING ANY WORK IN THE AFFECTED AREA.
13. ALL NEW SLAB OR CONCRETE WALL PENETRATIONS FOR THE PASSAGE OF CONDUITS MUST BE VERIFIED AND APPROVED BY THE STRUCTURAL ENGINEER AND BE X-RAYED OR RADAR PRIOR TO CORE DRILLING. OBTAIN APPROVAL FROM OWNER'S REPRESENTATIVE PRIOR TO ANY CORE DRILLING. SEAL ALL PENETRATIONS AFTER INSTALLATION TO MAINTAIN FIRE RATING OF SLABS.
14. ALL CONDUCTORS SHALL BE COPPER. MINIMUM SIZE SHALL BE #12 AWG. CONDUCTOR #10 AWG AND SMALLER SHALL BE SOLID. CONDUCTORS #8 AWG AND LARGER SHALL BE STRANDED. CONDUCTOR SHALL HAVE THHN/THWN INSULATION OR AS NOTED.
15. QUANTITY OF CONDUCTORS MAY NOT BE INDICATED FOR ALL CIRCUITS, PROVIDE QUANTITY OF HOT, SWITCHED HOT, NEUTRAL, GROUND AND ISOLATED GROUND CONDUCTORS AS REQUIRED FOR THE PROPER FUNCTION OF THE SYSTEM WHETHER INDICATED ON DRAWINGS OR NOT.
16. CONTRACTOR SHALL CIRCUIT TRACE ALL EXISTING CIRCUITS IN THE CONSTRUCTION AREA BACK TO SOURCE. IF REMOVAL OF EXISTING ELECTRICAL EQUIPMENT AFFECTS ANY EXISTING CIRCUITS, CONTRACTOR SHALL PROVIDE CIRCUIT BREAKERS, WIRING, CONDUIT, ETC. REQUIRED TO RECONNECT EXISTING-TO-REMAIN AND MAINTAIN EXISTING CIRCUITS ACTIVE AND FULLY FUNCTIONAL.
17. CONTRACTOR SHALL VERIFY WETHER A LINE VOLTAGE DIMMER OR LOW VOLTAGE DIMMER IS REQUIRED FOR EACH TYPE OF FIXTURE INSTALLED PER LIGHT FIXTURE SCHEDULE. DIMMER SWITCH SHALL BE SLIDER TYPE AND 100% COMPATIBLE WITH LIGHT FIXTURE LED DRIVERS.
18. ALL EXISTING AND NEW PANELS IMPACTED BY THIS PROJECT SHALL BE PROVIDED WITH NEW UPDATED TYPEWRITTEN PANEL SCHEDULES INDICATING THE FINAL ROOM NUMBER AND THE EQUIPMENT OR DEVICES SERVED BY THE CIRCUIT AS REQUIRED BY ARTICLE 408.4(A) OF THE NATIONAL ELECTRICAL CODE. CONTRACTOR TO RE-BALANCE THE NEW LOADS ON ALL THREE PHASES FOR EACH PANELBOARD WHERE WORK HAS BEEN PERFORMED.
19. INSTALLATION OF EQUIPMENT, COMPONENTS AND WIRING FOR ELECTRICAL SYSTEMS SHALL BE IN ACCORDANCE WITH REQUIREMENTS OF EQUIPMENT MANUFACTURER.
20. CONTRACTOR TO COORDINATE ELECTRICAL WORK TO PREVENT INTERFERENCE BETWEEN ALL OTHER TRADES.
   A. DETERMINE INTERFERENCE BEFORE WORK IS FABRICATED OR INSTALLED. THE CONTRACTOR SHALL BE THOROUGHLY FAMILIAR WITH ALL DETAILS OF WORK AND WORKING CONDITIONS AND COORDINATE WORK DURING PRELIMINARY STAGES TO ENSURE ACTUAL ERECTION/INSTALLATION WILL PROCEED WITHOUT INTERFERENCE. ADDITIONAL WORK REQUIRED TO BE PERFORMED FOR INTERFERENCE WITH OTHER TRADES WILL NOT CONSTITUTE GROUNDS FOR ADDITIONAL COMPENSATION.
   B. WHERE JOB CONDITIONS REQUIRE REASONABLE DEVIATIONS FROM CONTRACT DOCUMENTS, MAKE DEVIATIONS WITHOUT ADDITIONAL COST TO OWNER, AFTER OBTAINING APPROVAL OF ARCHITECT.
21. ELECTRICAL WORK COORDINATION.
   A. PROVIDE MAXIMUM PRACTICAL SPACE FOR OPERATION, REPAIR, REMOVAL, AND TESTING OF ELECTRICAL EQUIPMENT. APPROVED DEVIATIONS MAY BE MADE TO PROVIDE REQUIRED ACCESSIBILITY.
   B. KEEP CONDUITS, WIREWAYS AND SIMILAR ITEMS AS CLOSE AS POSSIBLE TO CEILING,WALLS AND COLUMNS IN ORDER TO TAKE UP MINIMUM AMOUNT OF SPACE.
   C. PROVIDE OFFSETS, FITTINGS AND SIMILAR ITEMS NECESSARY TO ACCOMPLISH REQUIREMENTS OF COORDINATION WITHOUT ADDITIONAL EXPENSE TO OWNER.
   D. PROVIDE ACCESS TO AND CLEARANCES AROUND EQUIPMENT AS REQUIRED BY THE N.E.C.
22. LIGHTING FIXTURES SHALL BE INDIVIDUALLY SUPPORTED FROM THE STRUCTURAL FRAMING MEMBERS ABOVE. DO NOT USE T-GRID CEILINGS AS SOLE SUPPORT FOR LIGHT FIXTURES.
23. TESTING:
   A. TEST AND ADJUST EQUIPMENT AND SYSTEMS INSTALLED AND DEMONSTRATE PROPER OPERATION TO OWNER'S REPRESENTATIVE. NO EQUIPMENT SHALL BE TESTED OR OPERATED FOR ANY PURPOSE UNTIL IT HAS BEEN FULLY PREPARED FOR OPERATION IN ACCORDANCE WITH MANUFACTURER'S INSTRUCTIONS.
   B. SHOW, BY DEMONSTRATION IN SERVICE, THAT ALL CIRCUITS AND DEVICES ARE IN GOOD OPERATING CONDITION. EACH PIECE OF EQUIPMENT AND COMPONENT OF THE ELECTRICAL SYSTEM SHALL FUNCTION NOT LESS THAN THREE TIMES IN COURSE OF THE ACCEPTANCE TESTS.
24. ELECTRICAL DEVICE INSTALLATION SHALL COMPLY WITH ACCESSIBILITY STANDARDS AS ADOPTED BY TEXAS.
25. PROVIDE BRANCH CIRCUIT WIRING FOR ALL ELECTRICAL CIRCUITS. WIRE SIZE SHALL BE A MINIMUM OF #12 THWN IN 1/2" RIGID, EMT. PROVIDE #10 WIRE FOR ALL CIRCUITS FARTHER THAN 100 FEET. ALL RACEWAYS SHALL CONTAIN A GREEN INSULATED GROUND WIRE SIZED PER N.E.C. BRANCH CIRCUITS SHALL HAVE FULL SIZE DEDICATED NEUTRALS (NO NEUTRAL SHARING). FLEXIBLE METAL CONDUIT SHALL ONLY BE USED FOR FIXTURE WHIPS AND FOR CONNECTION TO VIBRATING EQUIPMENT AND SHALL NOT EXCEED 72" IN LENGTH.
26. PROVIDE LARGER CONDUCTORS AS REQUIRED TO ACCOUNT FOR DERATING OF CONDUCTORS DUE TO TEMPERATURES ABOVE AMBIENT CONDITIONS, PER N.E.C. AMPACITY TABLES AND FOR VOLTAGE DROP.
27. CIRCUIT DIRECTORY SHALL BE UPDATED FOR EVERY CIRCUIT MODIFICATION AS REQUIRED PER N.E.C SECTION 408.4.
28. CONTRACTOR SHALL PROVIDE LIGHTING CALCULATIONS AND PHOTOMETRIC STUDIES FOR ALL EXTERIOR AND INTERIOR LIGHTING SPACES IF CONTRACTOR PROPOSES SUBSTITUTIONS FOR LIGHT FIXTURES AS SCHEDULED. PHOTOMETRIC CALCULATIONS AND STUDIES SHALL BE PROVIDED WITH THE FOLLOWING MINIMUM REQUIREMENTS:
   - 2X2 FT CALCULATION ZONES WITH NAMES TO MATCH SPACE BEING MODELED.
   - LIGHT FIXTURES TO HAVE A .95LLF.
   - TYPE LABEL ON LIGHT FIXTURES
   - MOUNTING HEIGHT OF LIGHT FIXTURES
   - LIGHT FIXTURE SCHEDULE
   - EMERGENCY CALCULATIONS SHALL BE PROVIDED, WHICH SHOW FIXTURES IN EMERGENCY MODE WITH LUMEN OUTPUT BASED ON PROPOSED BATTERY PACK AND EFFICACY TO MEET EMERGENCY LIGHTING REQUIREMENTS PER NFPA 101.
   - POWER DENSITIES
   - 95 LLF FOR ALL FIXTURES
   - STUDIES TO PROVIDE FOLLOWING MINIMUM PARAMETERS
     a. MAX
     b. MIN
     c. AVERAGE
     d. MAX/MIN
     e. AVG/MIN
29. CONTRACTOR SHALL SUBMIT AS-BUILTS WITH FIELD MODIFICATIONS IN AUTOCAD FORMAT VERSION 2020 AND ABOVE. ENGINEER WILL REVIEW AS-BUILTS ONLY FOR VERIFICATION THAT CONTRACTOR'S REDLINES HAVE BEEN INCORPORATED INTO AUTOCAD FILES. ENGINEER IS NOT RESPONSIBLE FOR CONTRACTOR AS-BUILT MODIFICATION. CONTRACTOR SHALL REQUEST AUTOCAD BASE DRAWINGS FROM ENGINEER FOR IMPLEMENTATION OF AS-BUILT DRAWINGS.
30. CONTRACTOR SHALL PROVIDE LIGHTING SYSTEM FUNCTIONAL TESTING AS REQUIRED BY SECTION C408.3 OF THE 2021 INTERNATIONAL ENERGY CONSERVATION CODE. CONTRACTOR SHALL CONTRACT A REGISTERED DESIGN PROFESSIONAL TO PROVIDE EVIDENCE THAT THE LIGHTING CONTROL SYSTEMS HAVE BEEN TESTED TO ENSURE THAT THE CONTROL HARDWARE AND SOFTWARE ARE CALIBRATED, ADJUSTED, PROGRAMMED AND IN PROPER WORKING CONDITION IN ACCORDANCE WITH THE CONSTRUCTION DOCUMENTS AND MANUFACTURER'S INSTRUCTIONS. CONTRACTOR SHALL PROVIDE DOCUMENTATION CERTIFYING THAT THE INSTALLED LIGHTING CONTROLS MEET DOCUMENTED PERFORMANCE CRITERIA OF SECTION C405 AND ARE TO BE PROVIDED TO BUILDING OWNER WITHIN 90 DAYS FROM DATE OF RECEIPT OF THE CERTIFICATE OF OCCUPANCY.
31. ALL UNDERGROUND SERVICE FEEDERS SHALL BE PROVIDED WITH 3 LAYER DETECTABLE WARNING TAPE AT 12" BELOW GRADE.

ELECTRICAL LEGEND

- GROUND MOUNTED DUPLEX GFI RECEPTACLE.
- 120/208V PANEL BOARD. REFER TO PANEL SCHEDULES
- 277/480V PANEL BOARD. REFER TO PANEL SCHEDULES
- WALL MOUNTED 4X4 JUNCTION BOX. MOUNT AT 18" AFF. UNLESS OTHERWISE NOTED
- CEILING MOUNTED 4X4 JUNCTION BOX.
- FLOOR MOUNTED 4X4 JUNCTION BOX.
- HOMERUN WITH NEUTRAL, HOT, GROUND CONDUCTORS RESPECTIVELY. USE MINIMUN OF #12 AWG CONDUCTORS AND MINIMUM OF 1/2" CONDUIT UNLESS OTHERWISE NOTED OR SCHEDULED.
- LINE TYPE - NEW
- LINE TYPE - EXISTING TO REMAIN
- LINE TYPE - EXISTING TO BE DEMOLISHED
- — OHE — OVERHEAD ELECTRICAL LINES.
- — UE — UNDERGROUND ELECTRICAL LINES.
- PB GROUND MOUNTED PULLBOX. SIZED AS REQUIRED. REFER TO PULL BOX DETAIL.
- GROUND MOUNTED FLOODLIGHT
- POLE MOUNTED LIGHT FIXTURE

KEYED NOTES

1. ELECTRICALLY HELD CONTACTOR 120V COIL, 2 POLE, 20 AMP CONTACT.
2. MOUNT H.O.A. SWITCH INSIDE ENCLOSURE FRONT COVER. PROVIDE LABEL ATTACHED WITH SCREWS. LABEL TO READ AS SHOWN ON DETAIL/CONTROL DIAGRAM..
3. 120 VOLT, TWIST-LOCK TYPE PHOTOCELL WITH MATCHING RECEPTACLE. MOUNT PHOTOCELL ON SIDE OF ENCLOSURE AND FACING NORTH. CONTRACTOR SHALL FIND THE MOST CONVENIENT ROUTING TO EXTEND CONDUIT FROM GROUND FLOOR TO SECOND FLOOR ROOF. PROVIDE 2 EXTRA PHOTOCELLS AND DELIVER TO OWNER.
4. NEMA 3R ENCLOSURE SIZED AS REQUIRED WITH HINGED LOCKABLE COVER. PROVIDE TERMINAL BLOCKS AS REQUIRED.
5. MOUNT DIMMER ON CONTACTOR ENCLOSURE FRONT COVER OR ADJACENT TO ENCLOSURE IF AVAILABLE SPACE PERMITS. PROVIDE LABEL ATTACHED WITH SCREWS. LABEL TO READ AS SHOWN ON DETAIL/CONTROL DIAGRAM.
6. DIGITAL TIME CLOCK INTERMATIC #ET8415CR, 4- CHANNEL, 120V OR APPROVED EQUAL. SET "ON"/"OFF" TIME AS DIRECTED BY OWNER.
7. ELECTRICALLY HELD CONTACTOR 120V COIL, 4 POLE, 20 AMP CONTACT.

LIGHT FIXTURE SCHEDULE

LABEL	DESCRIPTION	CATALOG #	INPUT WATTS	LUMENS	EFFICACY	VOLTS	MOUNTING	REMARKS
A	POLE MOUNTED AREA LIGHT LED FIXTURE	CURRENTLIGHTING/EXO #ASL1-80L-50-4K7-5QW-UNV-A-DBT- 0-10 DIMMING. MOUNT ON 20', SQUARE, NON-TAPPERED, STEEL, 100MPH POLE.	49	6360	130	120	CONCRETE POLE BASE	NOTE 1,3
B	GROUND MOUNTED LED FLOODLIGHT	CURRENTLIGHTING/BEACON RATIO FLOOD # RFL2-44L-25-4K7-W-UNV-K-DBT-0-10 DIMMING	25	3327	133	120	CONCRETE BASE	NOTE 1,2,4
C	GROUND MOUNTED LED FLOOD LIGHT	CURRENTLIGHTING/EXO COLT LBUL #LBUL-25-LSCS-0-10 DIMMING, 4000K.	25	3234	129	120	CONCRETE BASE	NOTE 1,3,4
D	IN-GRADE FLOODLIGHT	LITON # IG16-L12-UE-DUN-SR. 40DEGREE, 4000K	12	1200	100	120	IN-GRADE MOUNTED	NOTE 1,5

NOTES:
1. FURNISH AND INSTALL ALL BRACKETS, HARDWARE, ETC FOR A COMPLETE AND FULLY FUNCTIONAL INSTALLATION.
2. MOUNT ON EXISTING CONCRETE BASE.
3. REFER TO CONCRETE BASE DETAIL FOR MOUNTING REQUIREMENTS
4. AIM LIGHT FIXTURE TO PROVIDE MAXIMUM ILLUMINATION TO WALL OR BOULDER. MAINTAIN AIMING ANGLE AS LOW AS POSSIBLE TO AVOID LIGHT SPILLAGE TO ADJACENT PROPERTY AND AVOID AS MUCH UPLIGHT AS POSSIBLE
5. INSTALL PER MANUFACTURER RECOMMENDATION. COORDINATE INSTALLATION WITH CONCRETE CONTRACTOR.

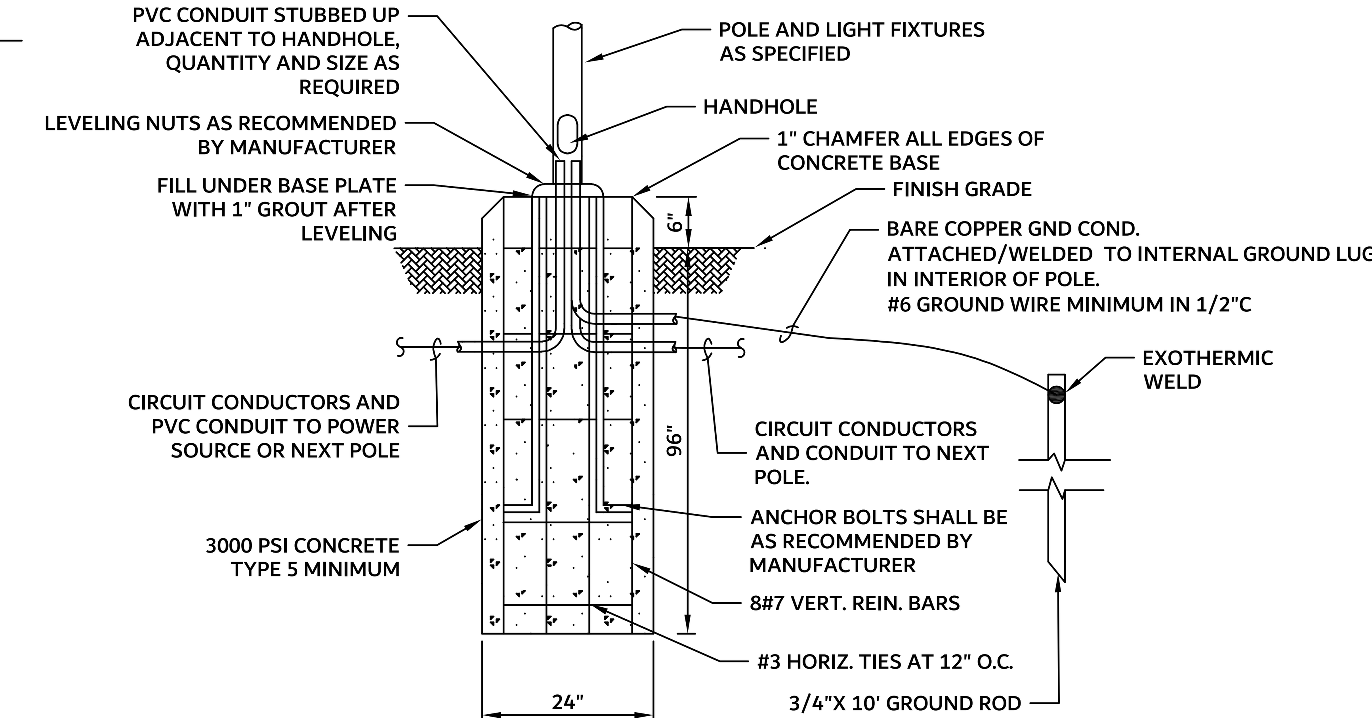

1 E-501 LIGHT POLE BASE DETAIL - TYPE "A" FIXTURE
Scale: NONE

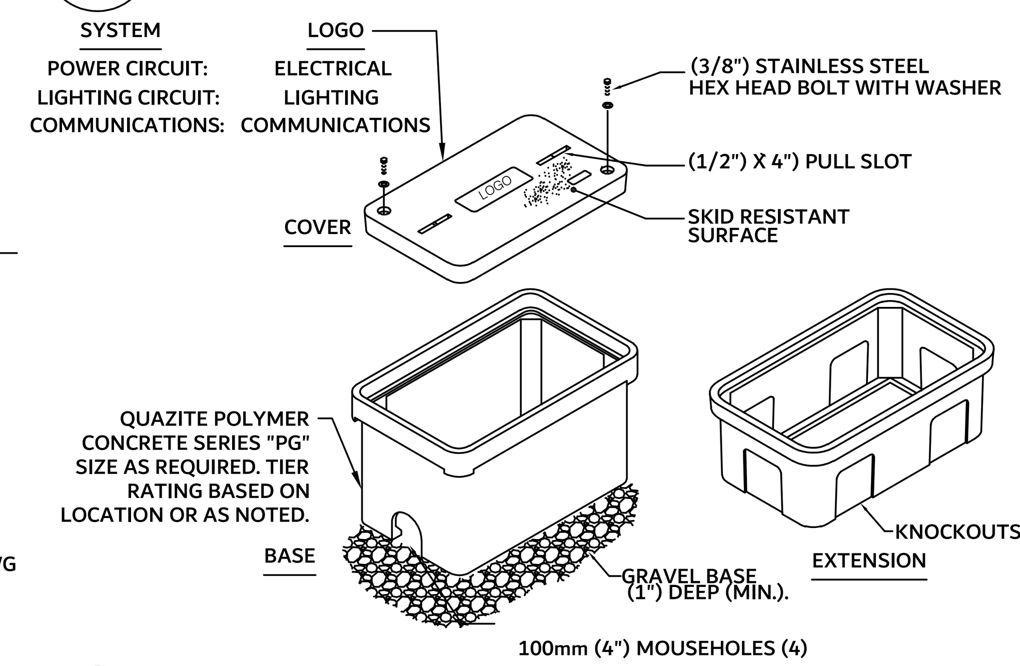

2 E-501 TYPICAL LIGHTING CIRCUIT PULLBOX DETAIL
Scale: NONE
SHOWN ON ELECTRICAL DRAWINGS AS: PB

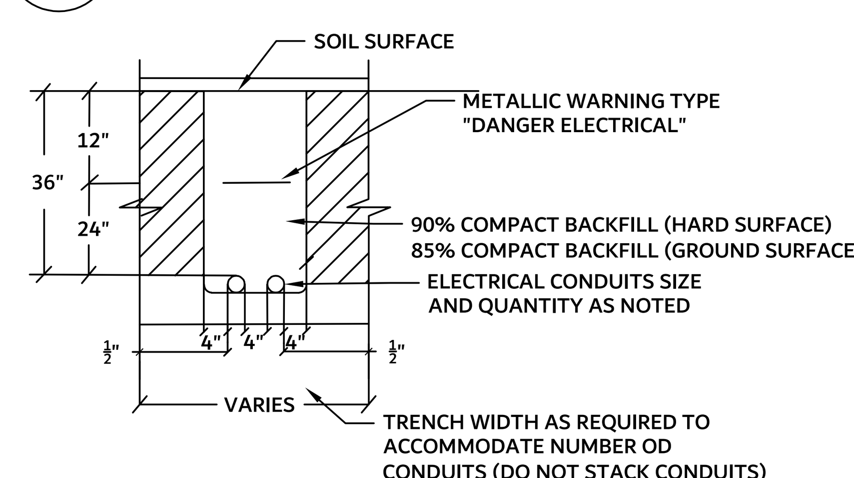

3 E-501 CONDUIT TRENCH DETAIL
Scale: NONE

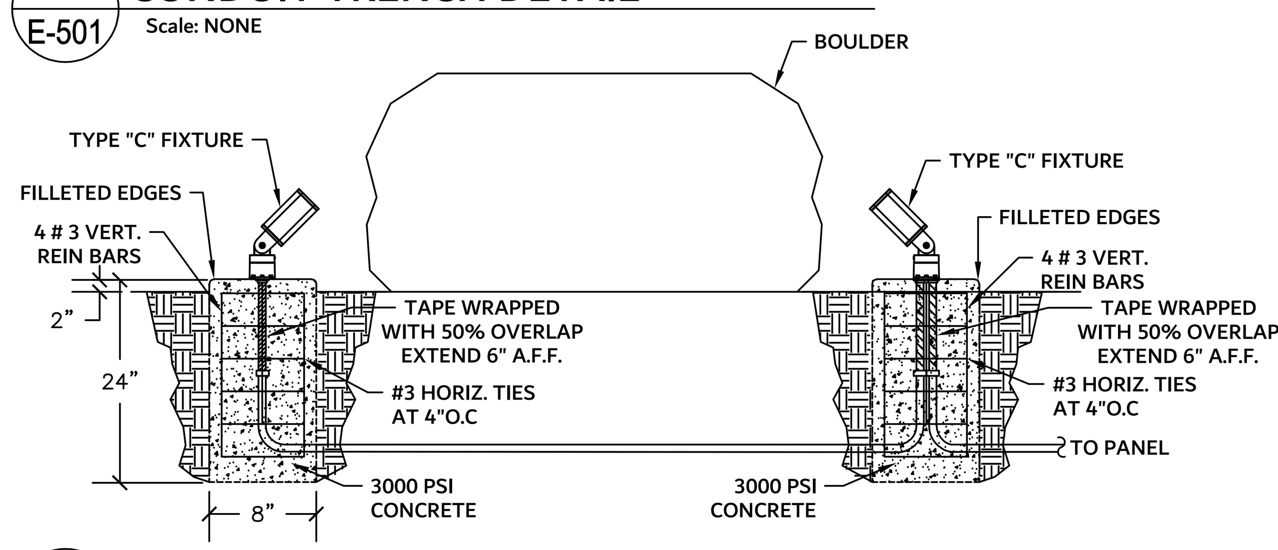

4 E-501 BOULDER LIGHTS DETAIL
Scale: NONE

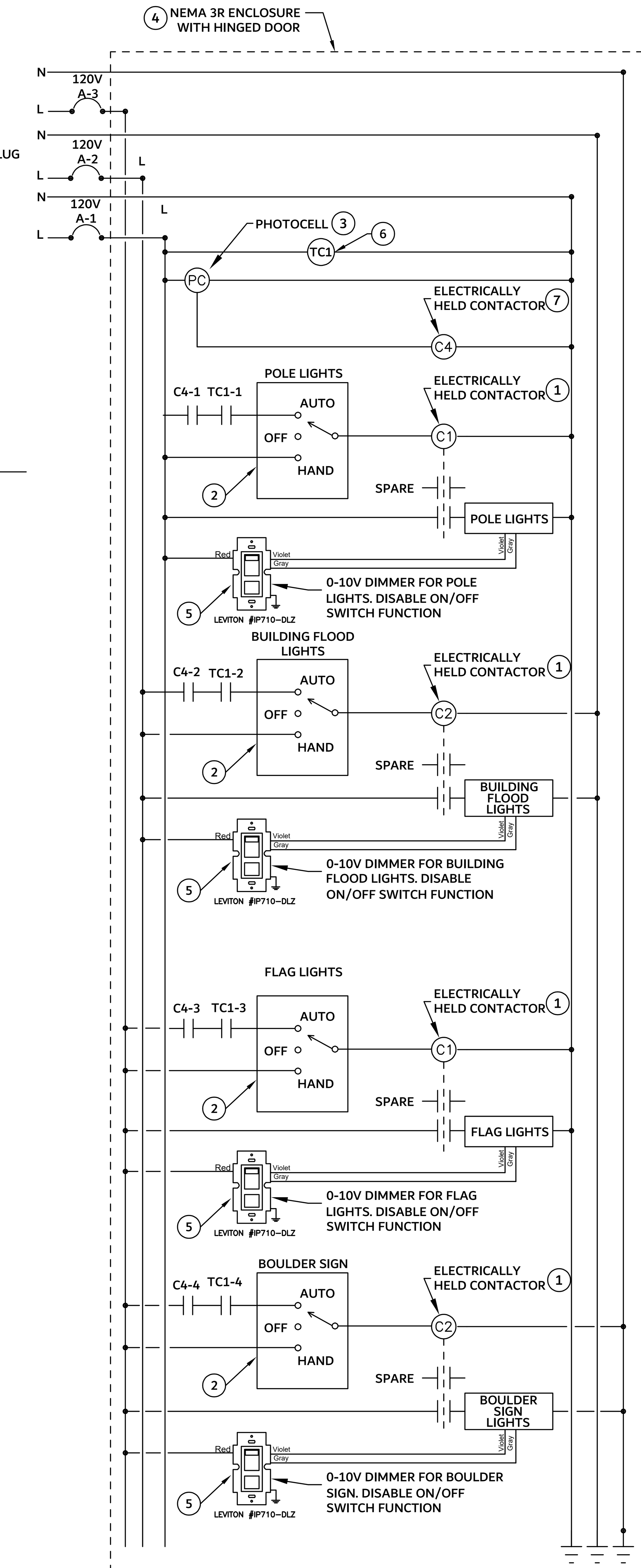

5 E-501 LIGHTING CONTROL DIAGRAM
Scale: NONE

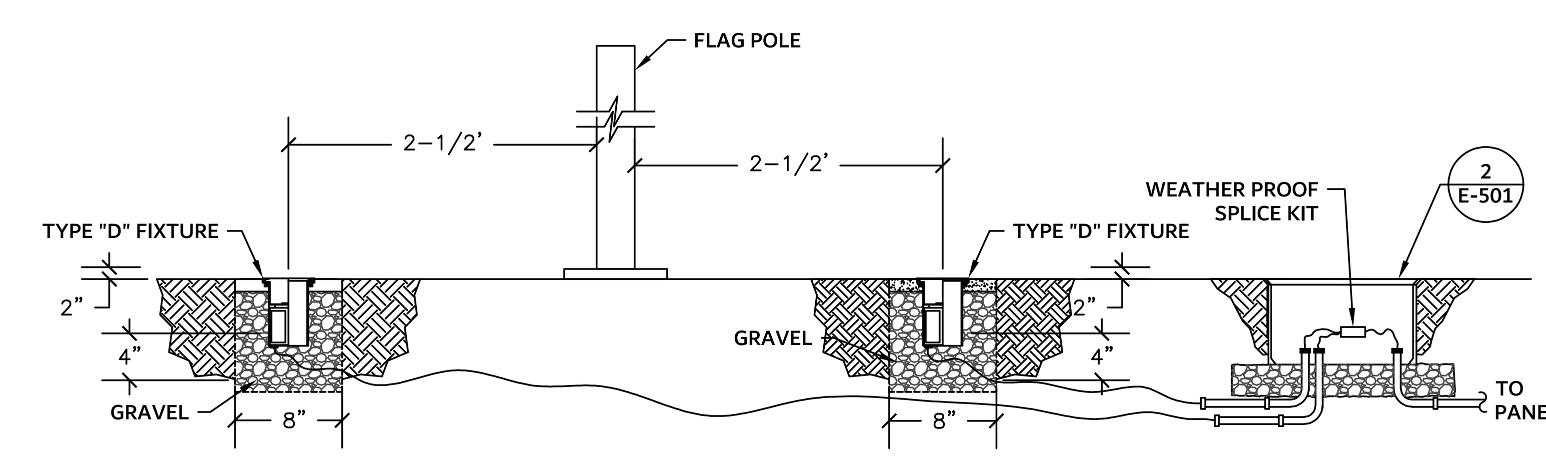

6 E-501 FLAG POLE LIGHTS DETAIL
Scale: NONE

DESIGN FIRM
DesignScapes
DESIGN : CONSULTING
P.O. BOX 290544 : EL PASO, TX 79929
PH : 915.497.1944
EMAIL: DESIGNSCAPESCONSULTING@GMAIL.COM

SEAL
STATE OF TEXAS
LORENZO L. DE SANTIAGO
90120
LICENSED PROFESSIONAL ENGINEER
6/20/25
THIS SEAL APPEARING ON THIS DOCUMENT WAS AUTHORIZED BY LORENZO L. DE SANTIAGO, P.E. #90120 ON JUNE 20, 2025. ALTERATION OF A SEALED DOCUMENT WITHOUT PROPER NOTIFICATION TO THE RESPONSIBLE ENGINEER IS AN OFFENSE UNDER THE TEXAS ENGINEERING PRACTICE ACT.
DSE NGINEERING PLLC
2150 TRAWOOD Dr., Ste. B251, EL PASO, TX 79935
O:(915)444-8519 C:(915)867-4041,FIRM No: F-16861

HORIZ. SCALE: AS INDICATED
VERT. SCALE: AS INDICATED
DATE: 06/20/2025
DESIGNED BY: L.D.S.
DRAWN BY: R.E.
CHECKED BY: L.D.S.
APPROVED BY: L.D.S.
JOB NAME: HCC SITE IMP

△ REVISIONS
1.
2.
3.
4.
5.
6.
7.
8.

PROJECT
NAME: HUDSPETH COUNTY COURTHOUSE SITE IMPROVEMENTS
ADDRESS: 109 MILLICAN ST. SIERRA BLANCA, TX

ELECTRICAL GENERAL NOTES AND LEGEND

ALTERNATE 1
E-501

THIS DOCUMENT, WHETHER IN HARD OR DIGITAL IS COPYRIGHTED AND AN INSTRUMENT OF SERVICES IN RESPECT OF THE PROJECT FOR WHICH IT WAS PREPARED. THIS DOCUMENT IS NOT INTENDED OR AUTHORIZED FOR REUSE BY ANY PARTY ON EXTENSIONS OF SUCH PROJECT OR ANY OTHER PROJECT. ANY REUSE, INCLUDING COPYING AND/OR MODIFYING THE DOCUMENT, WITHOUT WRITTEN PERMISSION OF DESIGN SCAPES FOR THE SPECIFIC PURPOSE INTENDED IS A VIOLATION OF FEDERAL COPYRIGHT LAW. UNAUTHORIZED USE OF THIS MATERIAL MAY RESULT IN CIVIL AND/OR CRIMINAL PENALTIES.

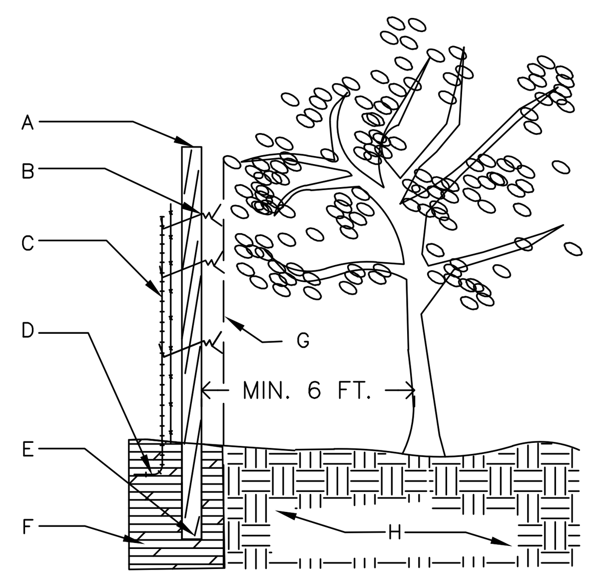

LEGEND:

A. 4"X4" WOOD OR STEEL T-POSTS, 4' HT. MIN. ABOVE GRADE @ 10' SPACING MAX. ALONG DRIPLINE OR NATIVE AREA TO BE PRESERVED
B. 42" WIDE, 120 LB., WIRE-FASTENED TO POSTS
C. BRIGHTLY COLORED MEDIUM DUTY SILT FENCE
D. BURY 6" OF SILT FENCE AT 6" DEPTH ON OPPOSITE SIDE OF PROTECTED AREA
E. BURY POST 2' MIN. BELOW GRADE
F. DISTURBED SOIL,
G. DRIPLINE OR EDGE OF NATIVE AREA TO BE PRESERVED
H. UNDISTURBED SUBGRADE

TREE OR NATIVE AREA PROTECTION NOTES:

1. ROOTS ARE VITAL TO THE FUNCTIONING OF ANY PLANT. THE MAJORITY OF THE ROOTS ARE IN THE CRITICAL ROOT ZONE WHICH IS WITHIN THE UPPER 18" OF SOIL. ROOTS PROVIDE STRUCTURAL SUPPORT AND NUTRIENT AND WATER UPTAKE FOR THE USE BY THE REST OF THE PLANT. DESTROYING A SECTION OF A PLANT'S ROOTS WILL ULTIMATELY RESULT IN A PROPORTIONAL LOSS OF THE PLANT AND POTENTIALLY IT'S DEATH.

2. ON A TREE, THE CRITICAL ROOT ZONE EXTENDS OUT TO THE DRIPLINE AND BEYOND. DESTROYING A SECTION OF A TREE'S ROOTS WILL ULTIMATELY RESULT IN A PROPORTIONAL LOSS OF THE TREE'S CANOPY. THE CRITICAL ROOT ZONE OF A TREE IS THE MINIMUM AREA TO BE PROTECTED WITH PROTECTION FENCING.

3. COMPACTED ROOTS WILL DAMAGE PLANTS. THE DESIGNATED PROTECTED AREA IS A NO COMPACTION ZONE. PROTECTION FENCING SHALL BE INSTALLED PRIOR TO THE START OF ANY CLEARING, GRADING OR OTHER CONSTRUCTION ACTIVITY. THE PROTECTED ZONE SHALL NOT BE BREACHED INCLUDING BY ANY MOTORIZED EQUIPMENT, HEAVY EQUIPMENT OR VEHICLES OF ANY KIND.

4. IF DIGGING IS NECESSARY WITHIN A PROTECTED ZONE, ONLY HAND DIGGING IS ALLOWED WITH THE APPROVAL OF THE LANDSCAPE ARCHITECT.

5. MINIMIZE DISTURBED AREA AND AMOUNT OF DISTURBANCE. PROTECTION FENCING SHALL BE PROMPTLY REPLACED IF IT IS MISSING OR HAS DETERIORATED AND SHALL NOT BE REMOVED UNTIL COMPLETION OF ALL CONSTRUCTION ACTIVITY.

6. PROTECTION FENCING MAY BE REMOVED AT COMMENCEMENT OF FINAL GRADING AFTER FINAL ACCEPTANCE OF ALL ROUGH GRADING AND/OR IRRIGATION WORK IF APPROVED BY LANDSCAPE ARCHITECT; OTHERWISE, IT SHALL BE REMOVED BEFORE FINAL ACCEPTANCE.

7. FOR QUESTIONS RELATED TO PROTECTION FENCING OR FOR FIELD INSPECTION, CONTACT PROJECT LANDSCAPE ARCHITECT.

(A) PROTECTION ZONE

NOT TO SCALE

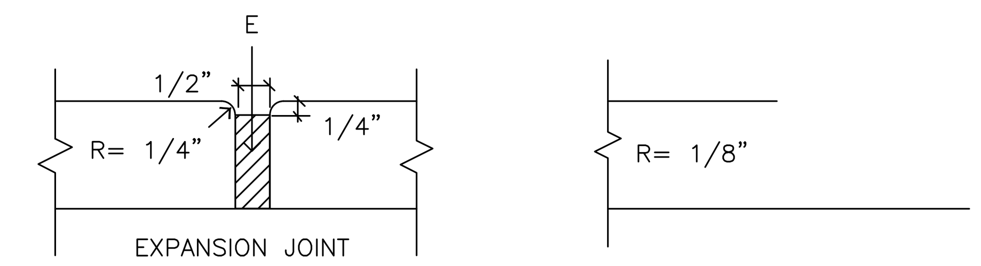

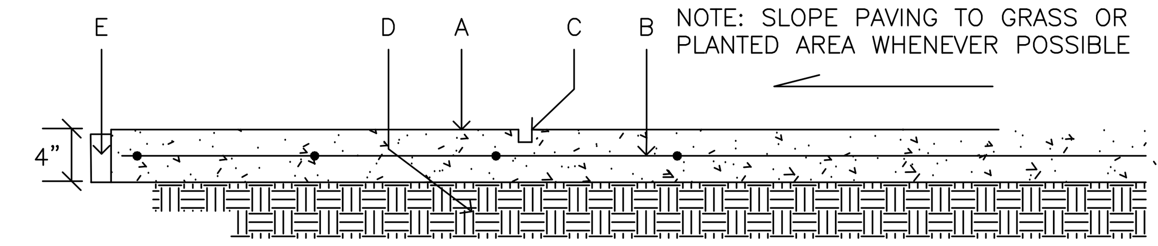

LEGEND:

A. 3000 PSI CONCRETE. TEST SLABS TO BE POURED AND APPROVED PRIOR TO COMMENCING WORK, PROVIDE FINISH AS INDICATED. IF NO FINISH SPECIFIED, PROVIDE LIGHT BROOM FINISH. PROVIDE TEST SLABS FOR EACH COLOR AND FINISH FOR APPROVAL PRIOR TO POURING REMAINING CONCRETE. TEST SLABS MAY REMAIN IN PLACE IF APPROVED AND IN LOCATION AS INDICATED ON PLAN.
B. 6" X 6" X W1.4 X W1.4 WELDED WIRE MESH.
C. CONTROL JOINTS : SPACE 6 FT. O.C. TYPICAL. EXPANSION JOINTS EVERY THIRD JOINT.
D. COMPACTED SUBGRADE : 95% PROCTOR DENSITY.
E. 1/2" PREMOLDED BITUMINOUS EXPANSION JOINT AND SEALANT,
F. TOOLED EDGE.

(B) 4" DEPTH CONCRETE PAVING

NOT TO SCALE

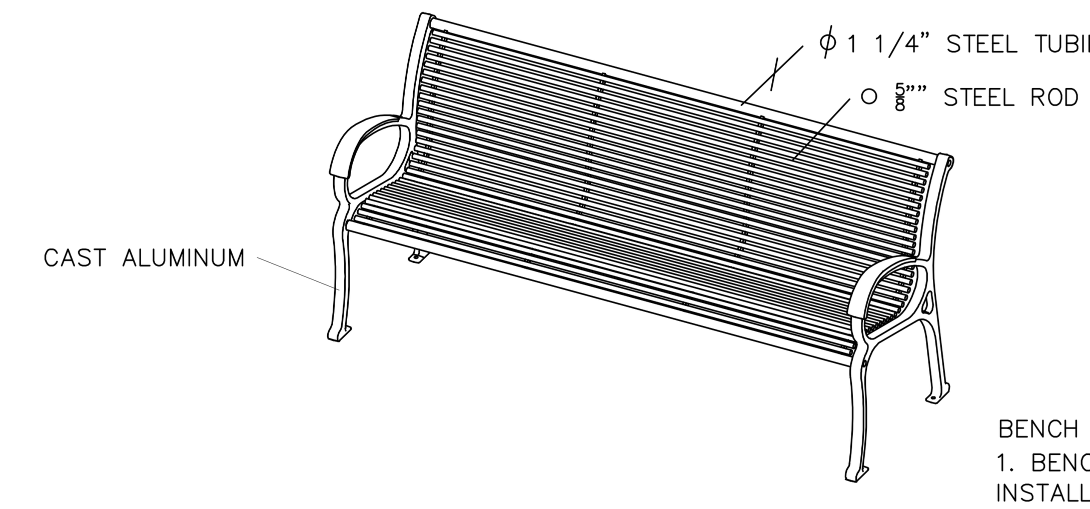

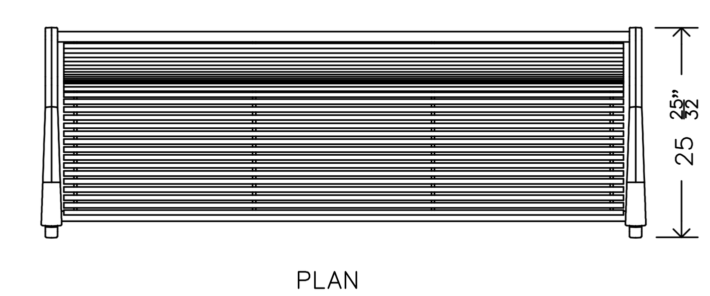

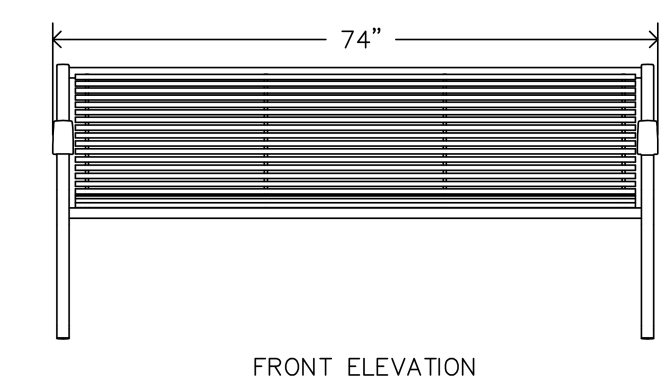

BENCH NOTES:
1. BENCH SHALL BE SURFACE MOUNTED, INSTALL PER MANUFACTURER'S SPECIFICATIONS.
2. ALL FASTENERS SHALL BE STAINLESS STEEL
3. BENCH SHALL BE POWDER COATED WITH TGIC POLYESTER
4. COLOR SHALL BE CHOSEN VIA SUBMITTAL DURING CONSTRUCTION.
STEEL SURFACE PREP SHALL INCLUDE MECHANICAL AND CHEMICAL ETCHING FOLLOWED WITH A COATING TO IMPROVE ADHESION AND CORROSION RESISTANCE.
5. LOCATION OF BENCHES SHALL BE MARKED AND APPROVED BY LANDSCAPE ARCHITECT IN WRITING PRIOR TO INSTALLATION.
6. BENCHES WITH BACK SHALL BE INSTALLED IN DIRECTION AS INDICATED ON PLAN.
7. FOR QUESTIONS RELATED TO BENCH, CONTACT PROJECT LANDSCAPE ARCHITECT.

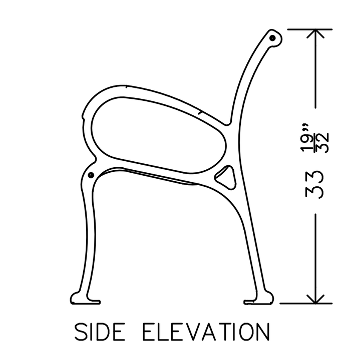

(C) BENCH

NOT TO SCALE

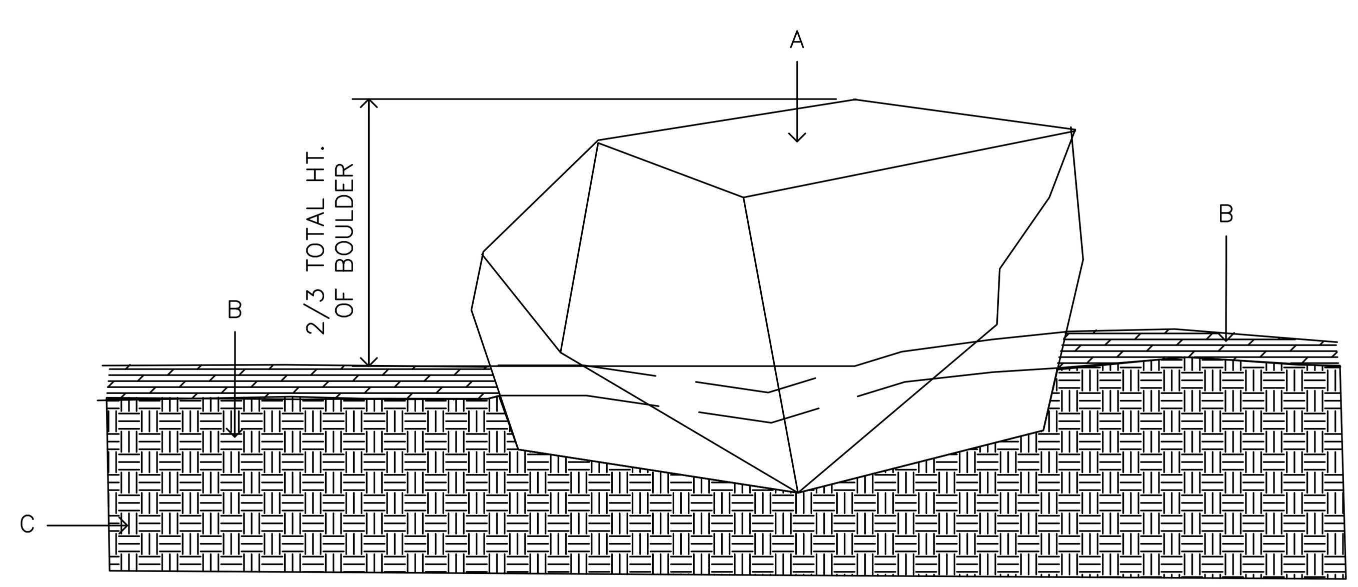

LEGEND:
A. BOULDER (TOP FACE)
B. FINISH MATERIAL
C. SUB SOIL

NOTES:
1. BURY BOULDER : INSTALL WITH APPROX. 2/3 OF HT. OF BOULDER VISIBLE ABOVE FINISH MATERIAL, NO BOULDER SHALL SIT ON TOP OF FINISH GRADE OR FINISH MATERIAL UNLESS SPECIFICALLY INDICATED.
2. WHERE SEATING BOULDER IS INDICATED, LOCATE BOULDER WITH FLAT SIDE (A) AND ORIENT SO THAT TOP FACE OF THE BOULDER IS FACING UP AND RELATIVELY FLAT.
3. IF SEATING BOULDER IS NOT SPECIFIED, NO FLAT TOP FACE IS REQUIRED.

(D) BOULDER INSTALLATION

NOT TO SCALE

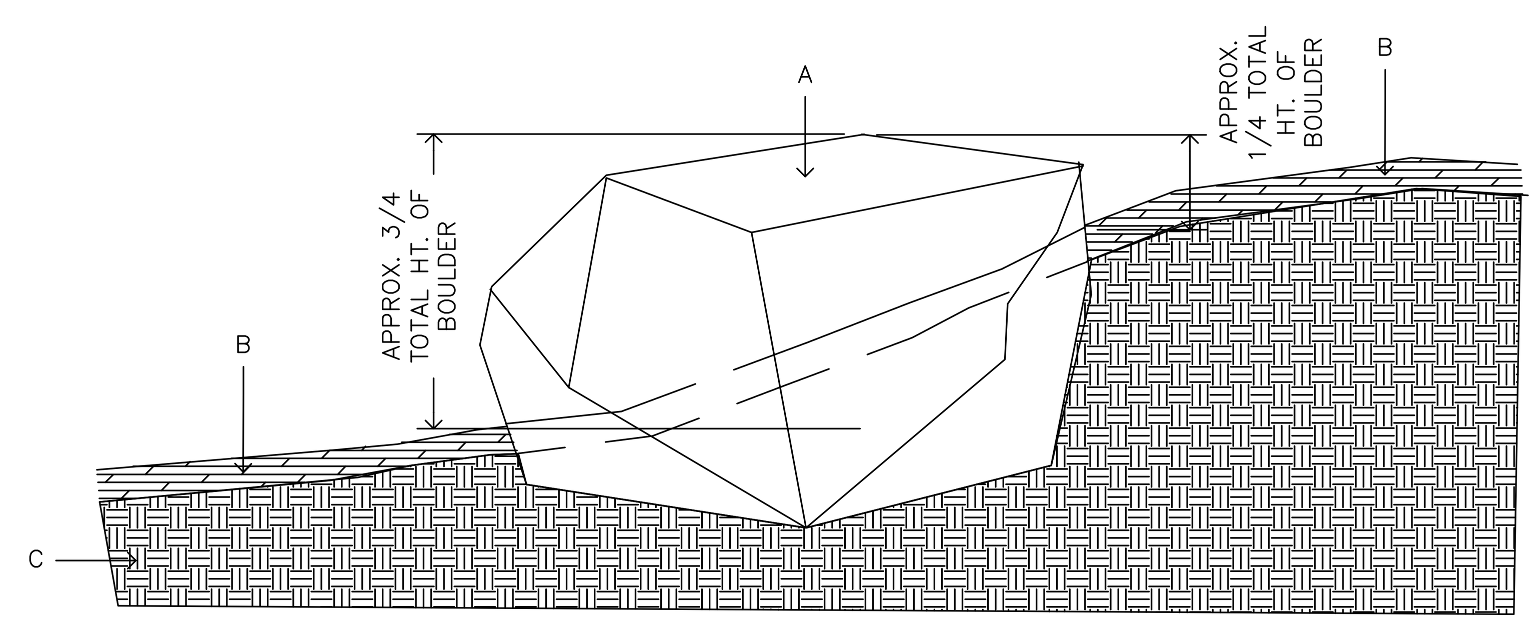

LEGEND:
A. BOULDER (TOP FACE)
B. FINISH MATERIAL
C. SUB SOIL

NOTES:
1. BURY BOULDER : INSTALL WITH APPROX. 3/4 OF HT. OF BOULDER VISIBLE ABOVE FINISH MATERIAL ON LOWER SIDE AND 1/4 OF BOULDER VISIBLE ABOVE FINISH MATERIAL ON UPPER SIDE. NO BOULDER SHALL SIT ON TOP OF FINISH GRADE OR FINISH MATERIAL UNLESS SPECIFICALLY INDICATED.
2. WHERE SEATING BOULDER IS INDICATED, LOCATE BOULDER WITH FLAT SIDE (A) AND ORIENT SO THAT IT IS TOP FACE OF THE BOULDER.
3. WHERE BOULDER IS ON EDGE OF SWALE OR SLOPE, BURY LOWER EDGE APPROX. 1/4 OF BOULDER AND BURY TOP EDGE TO WITHIN 1/4 OF TOP.

(E) BOULDER INSTALLATION ON SLOPE

NOT TO SCALE

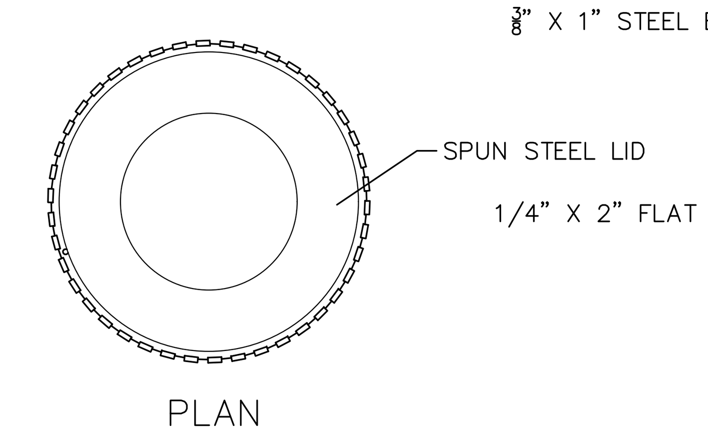

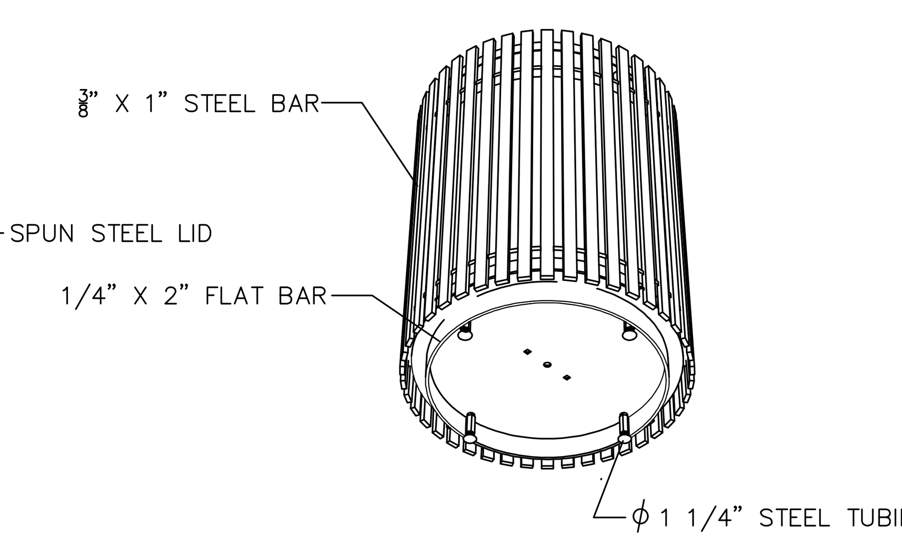

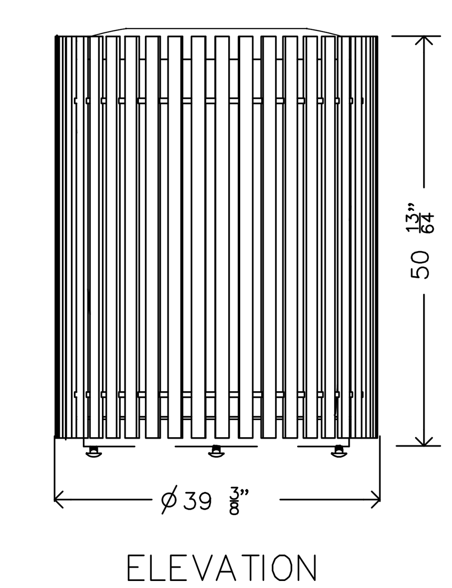

TRASH RECEPTACLE NOTES:
1. TRASH RECEPTACLE SHALL INCLUDE LINER AND CROWN LID AND BE INSTALLED PER MANUFACTURER'S SPECIFICATIONS.
2. ALL FASTENERS SHALL BE POWDER COATED STAINLESS STEEL
3. TRASH RECEPTACLE SHALL BE POWDER COATED WITH TGIC POLYESTER
4. COLOR SHALL BE CHOSEN VIA SUBMITTAL DURING CONSTRUCTION.
STEEL SURFACE PREP SHALL INCLUDE MECHANICAL AND CHEMICAL ETCHING FOLLOWED WITH A COATING TO IMPROVE ADHESION AND CORROSION RESISTANCE.
5. LOCATION OF TRASH RECEPTACLES SHALL BE MARKED AND APPROVED BY LANDSCAPE ARCHITECT IN WRITING PRIOR TO INSTALLATION.
6. FOR QUESTIONS, CONTACT PROJECT LANDSCAPE ARCHITECT.

(F) TRASH RECEPTACLE

NOT TO SCALE

FINAL FOR CONSTRUCTION

DESIGN FIRM

DesignScapes
DESIGN : CONSULTING
P.O. BOX 290544 : EL PASO, TX 79929
PH : 915.497.1944
EMAIL: DESIGNSCAPESCONSULTING@GMAIL.COM

SEAL

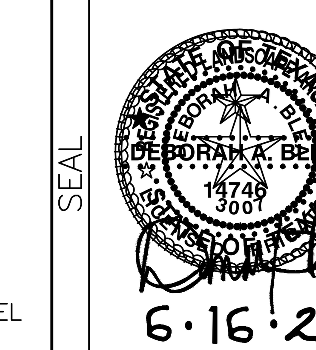

HORIZ. SCALE: AS INDICATED
VERT. SCALE: AS INDICATED
DATE: JUNE 2025
DESIGNED BY: DEBORAH BLEA
DRAWN BY: STAFF
CHECKED BY: DEBORAH BLEA
APPROVED BY: DEBORAH BLEA
JOB NAME: HCC SITE IMP

△ REVISIONS
1.
2.
3.
4.
5.
6.
7.
8.

PROJECT
NAME: HUDSPETH COUNTY COURTHOUSE SITE IMPROVEMENTS
ADDRESS: 109 MILLICAN ST. SIERRA BLANCA, TX

NOTES & DETAILS DEMOLITION & CONSTRUCTION

LC-501

THIS DOCUMENT, WHETHER IN HARD OR DIGITAL IS COPYRIGHTED AND AN INSTRUMENT OF SERVICES IN RESPECT OF THE PROJECT FOR WHICH IT WAS PREPARED. THIS DOCUMENT IS NOT INTENDED OR AUTHORIZED FOR REUSE BY ANY PARTY ON EXTENSIONS OF SUCH PROJECT OR ANY OTHER PROJECT. ANY REUSE, INCLUDING COPYING AND/OR MODIFYING THE DOCUMENT, WITHOUT WRITTEN PERMISSION OF DESIGN SCAPES FOR THE SPECIFIC PURPOSE INTENDED IS A VIOLATION OF FEDERAL COPYRIGHT LAW. UNAUTHORIZED USE OF THIS MATERIAL MAY RESULT IN CIVIL AND/OR CRIMINAL PENALTIES..

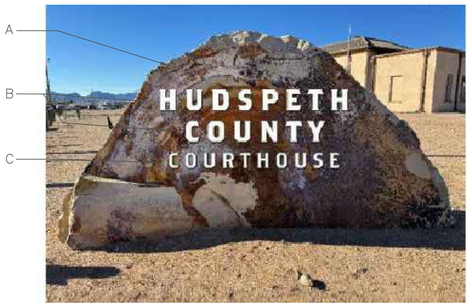

LEGEND:
A. EXISTING BOULDER
B. 9" NON-ILLUMINATED CAST METAL LETTERS.
C. 6" NON-ILLUMINATED CAST METAL LETTERS.

NOTES:
1. BOULDER SHALL BE IN FINAL LOCATION ON-SITE PRIOR TO INSTALLATION OF LETTERS.
2. STUD MOUNT METAL LETTERRS WITH 1/2" SPACERS, DRILLED INTO STONE FACE.
3. ALL METAL EDGES SHALL BE GROUND SMOOTH.
4. LETTERS SHALL BE PREPARED, PRIMED AND PAINTED WITH EXTERIOR GRADE PAINT (MIN. 3 COATS). OR POWDER COATED FOR MAXIMUM LONGEVITY. COLOR SHALL BE CHOSEN VIA SUBMITTAL DURING CONSTRUCTION.
5. CONTRACTOR SHALL PROVIDE TEMPLATE ON-SITE FOR REVIEW AND APPROVAL IN WRITING BY LANDSCAPE ARCHITECT PRIOR TO CONSTRUCTION OF LETTERS AND INSTALLATION OF SIGN.

(A) BUILDING NAME SIGN ON BOULDER

NOT TO SCALE

LEGEND:
A. REMOVABLE TOP RAIL WITH REMOVABLE HIDDEN FASTENERS
B. REMOVABLE 18"X24"W 3/8" THICK HIGH PRESSURE LAMINATE SIGN PANEL WITH SIGN IMAGE AND UV PROTECTION.
C. SIGN PANEL FRAME. PROVIDE RAIL WITH 3/8" FRAME GAP FOR 1/8" THICK SIGN PANEL.
D. ANCHOR PLATE WITH ANCHOR BOLTS. CROWN TOP OF FOOTING CONCRETE TO SHED WATER.
E. 3000 PSI CONCRETE FOOTING
F. SUB SOIL
G. COMPACT SOIL UNDER FOOTING TO 95% PROCTOR DENSITY

NOTES:
1. SIGN SHALL BE AT AN ANGLE TO FACILITATE VIEWING.
2. SIGN SHALL HAVE PEDESTAL TO SELF-SUPPORT SIGN PANEL FRAME.
3. IN-GROUND MOUNTING OR SURFACE MOUNTING ON FOOTING WITH ANCHOR PLATE WILL BE ALLOWED. CONTRACTOR TO PROVIDE FOOTING DESIGN IN SUBMITTAL FOR APPROVAL BY LANDSCAPE ARCHITECT PRIOR TO CONSTRUCTION.
4. ALL EDGES AND CORNERS SHALL BE SMOOTH. GRIND BURRS AS NECESSARY TO ENSURE SMOOTH FINISH.
5. SIGN FRAME SHALL BE EITHER POWDER COATED OR PAINTED WITH EXTERIOR GRADE PAINT (MIN. 3 COATS). COLOR AND FINISH SHALL BE CHOSEN VIA SUBMITTAL DURING CONSTRUCTION.
6. ARTWORK AND TEXT FOR SIGN PANELS SHALL BE PROVIDED AT ON-SET OF CONTRUCTION AND CONTRACTOR SHALL PROVIDE DRAFT FOR REVIEW AND APPROVAL IN WRITING BY LANDSCAPE ARCHITECT PRIOR TO CONSTRUCTION AND INSTALLATION OF SIGN PANELS.

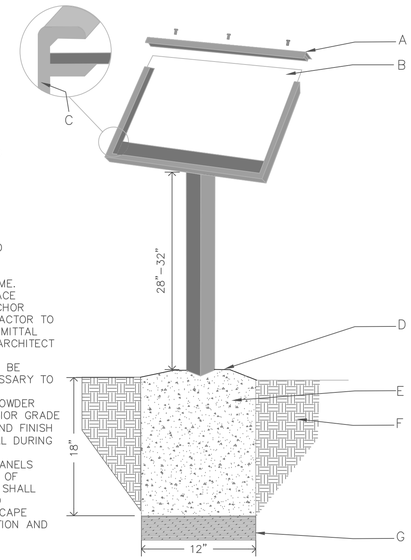

(B) SINGLE POST PEDESTAL INTERPRETIVE SIGN

NOT TO SCALE

(C) NOT USED

NOT TO SCALE

(D) NOT USED

NOT TO SCALE

(E) NOT USED

NOT TO SCALE

(F) NOT USED

NOT TO SCALE

FINAL FOR CONSTRUCTION

DESIGN FIRM

DesignScapes
DESIGN : CONSULTING
P.O. BOX 290544 : EL PASO, TX 79929
EMAIL: PH : 915.897.1944
DESIGNSCAPESCONSULTING@GMAIL.COM

SEAL

REGISTERED LANDSCAPE ARCHITECT
DEBORAH A. BLEA
3007
STATE OF TEXAS
6·16·25

HORIZ. SCALE: AS INDICATED
VERT. SCALE: AS INDICATED
DATE: JUNE 2025
DESIGNED BY: DEBORAH BLEA
DRAWN BY: STAFF
CHECKED BY: DEBORAH BLEA
APPROVED BY: DEBORAH BLEA
JOB NAME: HCC SITE IMP

△ REVISIONS
1.
2.
3.
4.
5.
6.
7.
8.

PROJECT
NAME: HUDSPETH COUNTY COURTHOUSE SITE IMPROVEMENTS
ADDRESS: 109 MILLICAN ST. SIERRA BLANCA, TX

NOTES & DETAILS DEMOLITION & CONSTRUCTION

LC-502

THIS DOCUMENT, WHETHER IN HARD OR DIGITAL IS COPYRIGHTED AND AN INSTRUMENT OF SERVICES IN RESPECT OF THE PROJECT FOR WHICH IT WAS PREPARED. THIS DOCUMENT IS NOT INTENDED OR REPRESENTED TO BE SUITABLE FOR REUSE BY ANY PARTY OR FOR ANY OTHER PROJECT. ANY REUSE WITHOUT WRITTEN VERIFICATION OR ADAPTATION BY DESIGNSCAPES FOR THE SPECIFIC PURPOSE INTENDED IS A VIOLATION OF FEDERAL COPYRIGHT LAW. UNAUTHORIZED USE OF THIS MATERIAL MAY RESULT IN CIVIL AND/OR CRIMINAL PENALTIES.

PLANTING NOTES

1. ALL NEW PLANT MATERIAL SHALL BE INSTALLED AS PER DETAILS.
2. PLANT MATERIAL SUBSTITUTIONS SHALL NOT BE MADE WITHOUT THE WRITTEN PERMISSION OF THE LANDSCAPE ARCHITECT. THE SUBSTITUTION OF MATERIALS DIFFERING IN KIND, QUALITY OR SIZE FROM THAT SPECIFIED WILL BE ALLOWED ONLY AFTER THE LANDSCAPE ARCHITECT IS CONVINCED THAT ALL MEANS OF OBTAINING THE SPECIFIED MATERIALS HAVE BEEN EXHAUSTED. CONTRACTOR SHALL PROVIDE WRITTEN ASSURANCE THAT ALL MATERIALS NECESSARY TO COMPLETE THE PROJECT AS SPECIFIED HAVE BEEN LOCATED AND ALL REQUESTS FOR SUBSTITUTIONS MUST BE SUBMITTED NO LATER THAN 2 WEEKS PRIOR TO THE INITIATION OF WORK.
3. PLANT MATERIAL QUALITY, SIZE AND CONDITION SHALL BE IN ACCORDANCE WITH AMERICAN STANDARD FOR NURSERY STOCK CURRENT EDITION, AS PUBLISHED BY THE AMERICAN ASSOCIATION OF NURSERYMEN.
4. ALL PLANTS SHALL BE TYPICAL OF THEIR SPECIES OR VARIETY. ALL PLANTS SHALL HAVE NORMAL, WELL DEVELOPED BRANCHES AND VIGOROUS ROOT SYSTEMS. THEY SHALL BE SOUND, HEALTHY, VIGOROUS, FREE FROM DEFECTS, DISFIGURING KNOTS, ABRASIONS OF THE BARK, SUNSCALD INJURIES, PLANT DISEASES, INSECT EGGS, BORES AND ALL OTHER FORMS OF INFECTIONS.
5. UNLESS OTHERWISE STATED ON THE DRAWINGS OR APPROVED BY LANDSCAPE ARCHITECT, ALL PLANTS SHALL BE NURSERY GROWN AND SHALL BE TAGGED WITH NURSERY LABELS INDICATING SPECIES AND VARIETY.
6. BALLED AND BURLAPPED PLANT MATERIAL SHALL HAVE A SOLID BALL OF EARTH OF MINIMUM SPECIFIED SIZE AND HELD IN PLACE SECURELY BY BURLAP AND A STOUT TWINE OR ROPE. BROKEN OR LOOSE BALLS WILL BE REJECTED, ALL BURLAP TWINE, CHIKEN WIRE, WOOD BOXES, ETC SHALL BE REMOVED DURING PLANTING WITHOUT COMPROMISING THE INTEGRITY OF THE ROOTBALL.
7. THE LANDSCAPE ARCHITECT MAY INSPECT ALL PLANT MATERIAL AT THE CONTRACTOR'S YARD PRIOR TO DELIVERY, DURING PLANTING AND AFTER PLANTING AT THE JOB SITE. AT THE OPTION OF THE CONTRACTOR, EL PASO COUNTY DESIGNATED REPRESENTATIVE AND LANDSCAPE ARCHITECT MAY INSPECT PLANT MATERIAL AT A WHOLESALE NURSERY OF THE CONTRACTOR'S CHOICE PRIOR TO DELIVERY OF MATERIALS TO THE CONTRACTOR'S YARD.
8. THE LANDSCAPE ARCHITECT SHALL BE THE JUDGE OF THE QUALITY AND ACCEPTABILITY OF ALL PLANT MATERIALS. ALL REJECTED MATERIAL SHALL BE IMMEDIATELY REMOVED FROM THE SITE AND REPLACED WITH ACCEPTABLE MATERIAL AT NO ADDITIONAL COST TO OWNER.
9. CONTAINER GROWN PLANT MATERIAL SHALL HAVE BEEN ESTABLISHED IN ITS DELIVERY CONTAINER FOR NOT LESS THAN SIX MONTHS, BUT FOR NOT MORE THAN TWO YEARS. ANY ROOTBOUND MATERIAL WILL NOT BE ACCEPTED.
10. UNLESS SPECIFICALLY NOTED ON THE DRAWINGS, ALL TREES SHALL HAVE A SINGLE TRUNK THAT IS STRAIGHT AND FREE OF "DOG-LEGS", "CROOKS", Y-CROTCHES", OR OTHER DISFIGURING SHAPES. THE CENTRAL LEADER OF ALL TREES SHALL NOT HAVE BEEN PRUNED. TREES WITH DOUBLE LEADERS ARE NOT ACCEPTABLE, UNLESS SPECIFIED AS MULTI-TRUNKED.
11. ALL PLANT MATERIAL SHALL HAVE A UNIFORM SHAPE AROUND ITS COMPLETE CIRCUMFERENCE. PLANT MATERIAL WITH IRREGULAR BRANCHING PATTERNS OR WITH BRANCHING PATTERNS MORE HIGHLY DEVELOPED ON ONE SIDE THAN ON OTHER SIDES SHALL NOT BE ACCEPTABLE.
12. TREE LOCATIONS AS SHOWN ARE SCHEMATIC AND MAY VARY BASED ON SIGNAGE & UNDERGROUND UTILIY LOCATIONS, AND OTHER SITE CONSTRAINTS. TREE LOCATIONS SHALL BE STAKED AND APPROVED BY LANDSCAPE ARCHITECT AND COMPLY WITH ALL JURISDICTIONAL ORDINANCES WHICH APPLY. PLANS ARE DIAGRAMMATIC AND APPROXIMATE DUE TO THE SCALE OF THE DRAWINGS, AND NOT ALL INDIVIDUAL SHRUBS AND/OR GROUND COVER ARE NECESSARILY SHOWN.
13. TREES SHALL ONLY BE STAKED (BASED ON THE PLANTING SEASON) IF APPROVED BY AND AT THE DIRECTION OF THE LANDSCAPE ARCHITECT OR DESIGNATED REPRESENTATIVE AS PER THE APPROPRIATE TREE PLANTING DETAIL AND SHALL BE STAKED AT NO ADDITIONAL COST, REQUESTED STAKING SHALL BE INCIDENTAL TO THE COST OF PLANTING THE TREE.
14. PLANTING SOIL BACKFILL SHALL CONSIST OF CLEAN SOILS AND SHALL BE FREE FROM RUBBISH, ROCK, LARGE STONES BRUSH, SOD, FROZEN MATERIAL OR OTHER UNSUITABLE SUBSTANCE THAT IS DETRIMENTAL TO PLANT GROWTH.

HERBICIDE NOTES

1. CONTRACTOR SHALL HAVE A TDA LICENSED APPLICATOR APPLY HERBICIDE.
2. CONTRACTOR SHALL PROVIDE MSDS INFORMATION FOR PRODUCT(S) IN SUBMITTAL PACKAGE. POST-EMERGENT APPLICATION: IF GRASS OR WEEDS ARE PRESENT AND ARE ANTICIPATED TO BE REMOVED, HERBICIDE MUST BE APPLIED PRIOR TO REMOVAL OF GRASS AND WEEDS, IDEALLY AT ON-SET OF CONSTRUCTION AND PRIOR TO DEMOLITION OR PRIOR TO REMOVAL OF EXISTING GRASS AND/OR PRIOR TO INSTALLATION OF NEW PLANTS. IN ALL CASES, HERBICIDE MUST BE APPLIED WHILE PLANT MATERIAL TO BE REMOVED IS ACTIVELY GROWING.
3. PROPER PROTECTION OF EXISTING PLANTS AND TREE ROOT SYSTEMS FOR EXISTING DESIRABLE PLANTS OR NEW PLANTS MUST BE TAKEN AS DIRECTED BY PRODUCT LITERATURE. PRE EMERGENT APPLICATION: APPLY PRE-EMERGENT TO AREAS OF SITE RECEIVING ROCK, SCREENINGS OR STABILIZED SCREENINGS, AFTER FINAL GRADING, BUT PRIOR TO INSTALLATION OF WEED FABRIC, IF SPECIFIED. CONTRACTOR SHALL APPLY SURFLAN (OR APPROVED EQUAL), FOLLOW MANUFACTURER'S INSTRUCTIONS FOR INSTALLATION. PRE-EMERGENT MUST INCLUDE PREVENTION OF ALL INVASIVE WEEDS AND GRASSES, INCLUDING BERMUDA GRASS. A COMBINATION OF PRE-EMERGENT PRODUCTS MAY BE USED IN ORDER TO ACHIEVE DESIRED RESULTS – PREVENTION OF FUTURE WEEDS AND GRASSES.

MAINTENANCE AND WARRANTY

1. LANDSCAPE MAINTENANCE SHALL BEGIN IMMEDIATELY WHEN PLANTS ARE ACQUIRED, CONTINUE THROUGH INSTALLATION UNTIL FINAL ACCEPTANCE.
2. MAINTENANCE SHALL INCLUDE WATERING, WEEDING, CULTIVATING, REMOVAL OF DEAD MATERIAL AND DEBRIS, RESETTING OF TREES TO UPRIGHT POSITIONS, RESTORATION OF EARTH BASINS AND MULCH, AND SUCH OTHER OPERATIONS AS MAY BE NECESSARY FOR THE HEALTH OF THE PLANTED STOCK AND THE GENERAL APPEARANCE OF THE LANDSCAPED AREAS. PROTECTION SHALL INCLUDE CARE OF THE PLANTED STOCK FROM DAMAGES RESULTING FROM TRESPASS, EROSION (INCLUDING WATERING), WEATHER, VANDALISM, DISEASE AND THE LIKE.
3. UPON COMPLETION, ALL PLANT MATERIAL AND LANDSCAPE SHALL BE GUARANTEED FOR THE PERIOD OF ONE YEAR, BEGINNING ON THE DATE OF FINAL CONTRACT ACCEPTANCE.

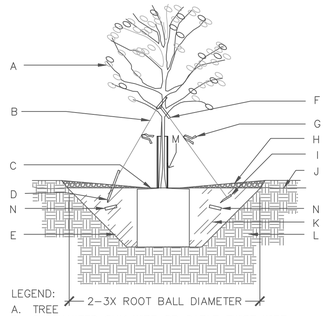

LEGEND:
A. TREE
B. GALVANIZED GUY WIRE OR CABLE TWIST WIRE, PROVIDE ABILITY TO LOOSEN OR TIGHTEN
C. PROVIDE 2" SPACE FROM MULCH TO TREE TRUNK, FEATHER MULCH TO FULL DEPTH
D. MIN. 30 INCH LONG WOODEN STAKE, STAKED INTO UNDISTURBED SOIL, OPTION: METAL DRIVE ANCHORS
E. 1:1 SLOPE ON SIDES OF PLANTING HOLE
F. 1/2" DIA. SOFT, PLIABLE PLASTIC HOSE TO PROTECT TREE TRUNK
G. PLASTIC FLAGGING ON EACH WIRE
H. MULCH, MIN. 18" RADIUS BARK IN GRASS AREA.
I. OPT. METAL DRIVE ANCHORS, INSTALLED PER MANUFACTURERS DIRECTIONS, OPTION TO WOODEN STAKES.
J. TOP OF FINISH MATERIAL
K. BACKFILL WITH EXISTING NATIVE SOIL
L. UNDISTURBED SOIL
M. PLASTIC TREEGUARD, INSTALL IN GRASS AREAS, OR NATIVE OR NATIVE ADJACENT AREAS WHERE SMALL ANIMALS WILL HARM TREE TRUNKS.
N. SLOW RELEASE BALANCED FERTILIZER TABLETS, PROVIDE: 8 PER TREE AND 4 PER 15 GAL.

TREE PLANTING NOTES:

1. KEEP SOIL BELOW ROOT BALL UNDISTURBED TO PREVENT TREE FROM SETTLING.
2. REMOVE ANY EXCESS SOIL FROM TOP OF ROOTBALL TO EXPOSE ROOT FLARE (WHERE TOP MOST ROOT EMERGES FROM THE TRUNK). PLANT WITH ROOT FLARE LEVEL AT FINISH GRADE (OR 1"-2" HIGHER IN SLOWLY DRAINING SOIL).
3. REMOVE CONTAINER AND CUT ANY ROOTS THAT ARE CIRCLING THE CONTAINER.
4. TAMP SOIL FIRMLY AROUND BASE OF ROOTBALL WITH FOOT PRESSURE.
5. AT TIME OF PLANTING, ONLY PRUNE CO-DOMINANT LEADERS (DOES NOT APPLY TO NATIVE OR MULTI-TRUNK SPECIMENS), CROSSOVER LIMBS, AND DEAD OR BROKEN BRANCHES.
6. GUY TREES ONLY IF TREE CANNOT STAND ALONE AND WITH APPROVAL OF THE LANDSCAPE ARCHITECT.
7. DO NOT ALLOW MULCH IN CONTACT WITH TREE TRUNK, FEATHER AWAY FROM TRUNK.
8. WHEN DONE, THOUROUGHLY WATER TO ELIMINATE AIR POCKETS.
9. PROVIDE MIN. 3 GUY/ TREE (TYP.) IN A TRIANGULAR PATTERN, GUYED INTO UNDISTURBED SOIL.
10. GUY WIRES SHOULD NOT BE TIGHTENED TOO TIGHTLY. THEY SHOULD ALLOW FOR SOME MOVEMENT IN TREE TRUNK

(A) TREE PLANTING

NOT TO SCALE

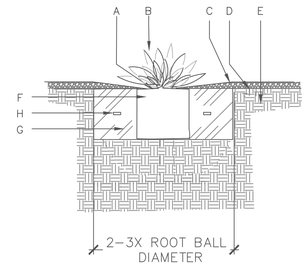

LEGEND:
A. PROVIDE 2" SPACE FROM MULCH TO TRUNK, FEATHER MULCH TO FULL DEPTH.
B. SHRUB, VINE OR ACCENT PLANT
C. TOP OF MULCH, FEATHER BACK MULCH FROM BASE OF SHRUB
D. TOP OF FINISH GRADE
E. UNDISTURBED NATIVE SOIL
F. ROOT BALL (SET CROWN FLUSH WITH FINISHED GRADE.
G. BACKFILL WITH NATIVE SOIL.
H. 7 GRAM SLOW RELEASE BALANCED PLANT FERTILIZER TABLETS (1 GAL= 2, 5 GAL=3, 10-15 GAL= 4)

PLANTING NOTES:

1. PLANTS PLANTED IN ROCKY, CALICHE AND CLAY SOILS TO HAVE PIT EXCAVATED 5 TIMES THE SIZE OF THE ROOTBALL.
2. TREES PLANTED IN ROCKY, CALICHE AND CLAY SOILS TO HAVE $\frac{1}{4}$ TO $\frac{1}{2}$ TOP SOIL BLENDED WITH NATIVE SOIL AND USED AS BACKFILL.
3. TREES PLANTED IN ROCKY SOIL ARE TO HAVE ALL ROCKY MATERIAL LARGER THAN 1" IN SIZE REMOVED, ANY ADDITIONAL SOIL NECESSARY TO MATCH LEVELS REQUIRED, SHALL BE NATIVE SOIL.

(B) SHRUB OR ACCENT PLANTING

NOT TO SCALE

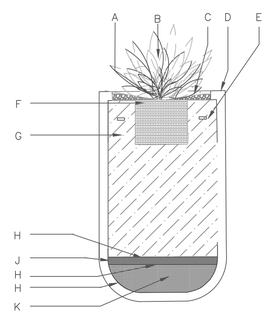

POTTING SOIL MIX NOTE:

1. NO NATIVE SOIL WILL BE ALLOWED.
2. POTTING MIX SHALL CONSIST OF CACTUS TYPE PLANTING SOIL OR A MIXTURE OF 1 PART POTTING SOIL, 3 PARTS COARSE SAND. COMBINE THOROUGHLY.
3. POTTING MIX INGREDIENTS SHALL BE FREE OF WEED SEEDS, TRASH OR DEBRIS.

LEGEND:
A. TOP OF ROOT BALL
B. SHRUB, VINE OR ACCENT PLANT
C. TOP OF MULCH, FEATHER BACK MULCH FROM BASE OF SHRUB
D. POT SPECIFIED
E. 7 GRAM SLOW RELEASE BALANCED PLANT FERTILIZER TABLETS (1 GAL= 2, 5 GAL=3, 10-15 GAL= 4)
F. ROOT BALL (SET CROWN FLUSH WITH TOP OF POTTING SOIL MIX.
G. POTTING SOIL MIX, SEE NOTE ON THIS DETAIL.
H. WEED FABRIC
J. 2" DEPTH $\frac{3}{8}$" PEA GRAVEL FOR DRAINAGE
K. 6" DEPTH 1"- 1 $\frac{1}{2}$" ROCK GRAVEL FOR DRAINAGE

(C) SHRUB OR ACCENT PLANTING IN CONTAINER

NOT TO SCALE

FINAL FOR CONSTRUCTION

DESIGN FIRM

DesignScapes
DESIGN : CONSULTING
P.O. BOX 290544; EL PASO, TX 79929
EMAIL: PH : 915.497.1944
DESIGNSCAPESCONSULTING@GMAIL.COM

SEAL

REGISTERED LANDSCAPE ARCHITECT
DEBORAH A. BLEA
3007
STATE OF TEXAS
6·16·25

HORIZ. SCALE: AS INDICATED
VERT. SCALE: AS INDICATED
DATE: JUNE 2025
DESIGNED BY: DEBORAH BLEA
DRAWN BY: STAFF
CHECKED BY: DEBORAH BLEA
APPROVED BY: DEBORAH BLEA
JOB NAME: HCC SITE IMP.

△ REVISIONS
1.
2.
3.
4.
5.
6.
7.
8.

PROJECT
NAME: HUDSPETH COUNTY COURTHOUSE SITE IMPROVEMENTS
ADDRESS: 109 MILLICAN ST. SIERRA BLANCA, TX

THE STATE OF TEXAS
HUDSPETH COUNTY

NOTES & DETAILS PLANTING

LP-501

THIS DOCUMENT, WHETHER IN HARD OR DIGITAL IS COPYRIGHTED AND AN INSTRUMENT OF SERVICES IN RESPECT OF THE PROJECT FOR WHICH IT WAS PREPARED. THIS DOCUMENT IS NOT INTENDED OR AUTHORIZED FOR REUSE BY ANY PARTY ON EXTENSIONS OF SUCH PROJECT OR ANY OTHER PROJECT. ANY REUSE, INCLUDING COPYING AND/OR MODIFYING THE DOCUMENT, WITHOUT WRITTEN PERMISSION OF DESIGN SCAPES FOR THE SPECIFIC PURPOSE INTENDED IS A VIOLATION OF FEDERAL COPYRIGHT LAW. UNAUTHROIZED USE OF THIS MATERIAL MAY RESULT IN CIVIL AND/OR CRIMINAL PENALTIES..

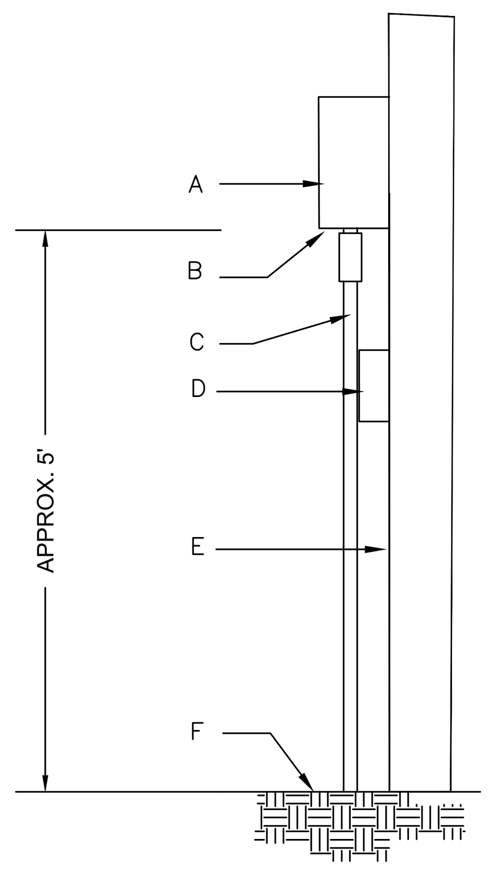

NOTES:

1. CONTRACTOR SHALL GROUND CABINET TO GROUNDING ROD WITH #10 GAUGE OR HEAVIER STRANDED COPPER WIRE AS PER MANUFACTURER'S RECOMMENDATIONS.
2. IF NO POWER OUTLET AVAILABLE FOR USE, CONTRACTOR SHALL PROVIDE POWER OUTLET.
3. CONTRACTOR SHALL COORDINATE EXACT LOCATION OF CONTROLLER AND POWER OUTLET WITH OWNER'S REPRESENTATIVE.

LEGEND:

A. TRANSFORMER, INSTALL AT EYE LEVEL
B. BOTTOM OF TRANSFORMER BOX INSTALL APPROX. 5 FT. ABOVE FINISH GRADE
C. ELECTRICAL SUPPLY AND LOW VOLTAGE LANDSCAPE LIGHTING WIRES IN PVC CONDUIT, SIZE AS PER MANUFACTURER'S RECOMMENDATIONS
D. POWER OUTLET, COVER AND SEAL ALL OPENINGS MADE TO WALL.
E. BUILDING OR FREESTANDING WALL
F. FINISH SURFACE

(A) TRANSFORMER INSTALLATION

NOT TO SCALE

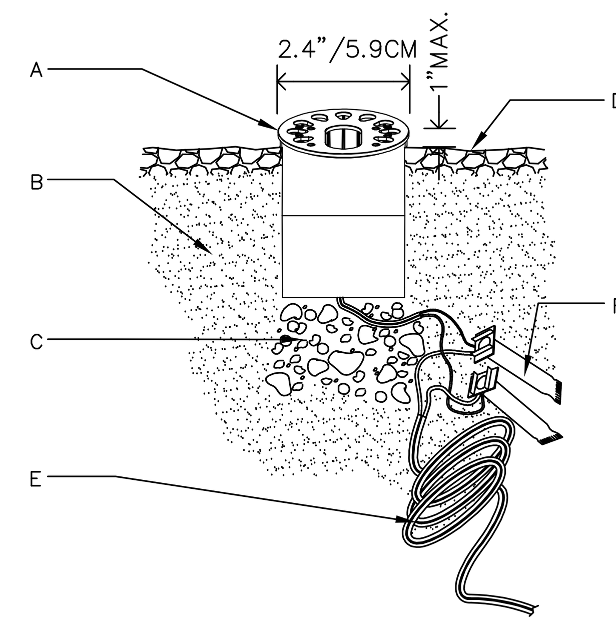

LEGEND:

A. SPECIFIED IN-GRADE FIXTURE
B. SUBGRADE
C. 4" PEA GRAVEL FOR DRAINAGE
D. TOP OF FINISH MATERIAL
E. DIRECT BURY UF/UL COPPER, LOW VOLTAGE CABLE
F. 3M DBR/Y-6 DIRECT BURY SPLICE KIT.

DETAIL NOTES:

1. INSTALLATION TO BE COMPLETED IN ACCORDANCE WITH MANUFACTURER'S SPECIFICATIONS.
2. WHEN INSTALLING DIRECT BURIAL CABLE, LEAVE MIN. 18" WIRE LOOP COILED BELOW EACH FIXTURE FOR SERVICE.
3. ACCEPTS 10-15 VOLTS, AC OR DC
4. FOR QUESTIONS OR FOR FIELD INSPECTION, CONTACT PROJECT LANDSCAPE ARCHITECT.

(B) UPLIGHT INSTALLATION

NOT TO SCALE

(C) NOT USED

NOT TO SCALE

(D) NOT USED

NOT TO SCALE

(E) NOT USED

NOT TO SCALE

(F) NOT USED

NOT TO SCALE

FINAL FOR CONSTRUCTION

DESIGN FIRM

DesignScapes
DESIGN : CONSULTING
P.O. BOX 290544 : EL PASO, TX 79929
PH : 915.497.1944
EMAIL: DESIGNSCAPESCONSULTING@GMAIL.COM

SEAL

DEBORAH A. BLEA 15746
6·16·25

HORIZ. SCALE: AS INDICATED
VERT. SCALE: AS INDICATED
DATE: JUNE 2025
DESIGNED BY: DEBORAH BLEA
DRAWN BY: STAFF
CHECKED BY: DEBORAH BLEA
APPROVED BY: DEBORAH BLEA
JOB NAME: HCC SITE IMP

△ REVISIONS
1.
2.
3.
4.
5.
6.
7.
8.

PROJECT
NAME: HUDSPETH COUNTY COURTHOUSE SITE IMPROVEMENTS
ADDRESS: 109 MILLICAN ST. SIERRA BLANCA, TX

THE STATE OF TEXAS · HUDSPETH COUNTY

NOTES & DETAILS
LANDSCAPE LIGHTING

LC-502

THIS DOCUMENT, WHETHER IN HARD OR DIGITAL IS COPYRIGHTED AND AN INSTRUMENT OF SERVICES IN RESPECT OF THE PROJECT FOR WHICH IT WAS PREPARED. THIS DOCUMENT IS NOT INTENDED OR AUTHORIZED FOR RELEASE BY ANY PARTY ON EXTENSIONS OF SUCH PROJECT OR ANY OTHER PROJECT. ANY REUSE, INCLUDING COPYING AND/OR MODIFYING THE DOCUMENT, WITHOUT WRITTEN PERMISSION OF DESIGN SCAPES FOR THE SPECIFIC PURPOSE INTENDED IS A VIOLATION OF FEDERAL COPYRIGHT LAW. UNAUTHORIZED USE OF THIS MATERIAL MAY RESULT IN CIVIL AND/OR CRIMINAL PENALTIES.

IRRIGATION NOTES

1. THIS PLAN SET PROVIDES SPECIFICATIONS FOR A NEW IRRIGATION SYSTEM AND SHALL BE INSTALLED IN ACCORDANCE WITH TCEQ GUIDELINES.
2. CONTRACTOR SHALL MEASURE PRESSURE AT P.O.C. PRIOR TO INITIATION OF CONSTRUCTION BY INSTALLING A FLOW METER AND A PRESSURE GAUGE ON THE DOWNSTREAM SIDE OF THE IRRIGATION CONNECTION. THIS INFORMATION SHALL BE PROVIDED TO THE IRRIGATION DESIGNER IN WRITING TO VERIFY HYDRAULICS. OBTAIN APPROVAL IN WRITING FROM IRRIGATION DESIGNER PRIOR TO PROCEEDING.
3. CONTRACTOR SHALL BE RESPONSIBLE FOR PROTECTION OF ALL SITE ELEMENTS & AREAS TO REMAIN. CONTRACTOR SHALL REPLACE IN KIND, ALL ITEMS DAMAGED DURING THE COURSE OF WORK, AS DETERMINED BY THE IRRIGATION DESIGNER.
4. THE CONTRACTOR SHALL VERIFY THE LOCATIONS OF ALL EXISTING UTILITIES, STRUCTURES AND SERVICES BEFORE COMMENCING WORK. THE LOCATIONS OF UTILITIES, STRUCTURES AND SERVICES SHOWN IN THESE PLANS ARE APPROXIMATE ONLY. ANY DISCREPANCIES BETWEEN THESE PLANS AND ACTUAL FIELD CONDITIONS SHALL BE REPORTED IN WRITING TO THE LANDSCAPE ARCHITECT.
5. THE CONTRACTOR SHALL OBTAIN ALL NECESSARY PERMITS REQUIRED TO PERFORM THE WORK INDICATED HEREIN BEFORE BEGINNING WORK.
6. THIS DESIGN (LINES & COMPONENTS) IS DIAGRAMMATIC. ALL EQUIPMENT SHOWN IN PAVED AREA IS FOR DESIGN CLARITY ONLY AND CONSTRUCTED ELEMENTS AND OBSTRUCTIONS WHETHER NOTED ON THE PLANS OR NOT SHALL BE AVOIDED AND ALL IRRIGATION EQUIPMENT SHALL BE INSTALLED WITHIN PLANTING AREAS AND EVERY EFFORT SHALL BE MADE TO MINIMIZE SLEEVING.. ACTUAL ALIGNMENTS TO BE LOCATED AS PER NOTES OR AS APPROVED IN FIELD BY THE LANDSCAPE ARCHITECT.
7. IN THE EVENT OF A CONFLICT BETWEEN SPECIFICATIONS AND IRRIGATION DESIGN, CONTRACTOR SHALL NOTIFY THE LICENSED IRRIGATION DESIGNER IN WRITING. THE CONTRACTOR SHALL NOT PROCEED WITH INSTALLATION OF CONFLICTING IRRIGATION COMPONENTS UNTIL CLARIFICATION IS RECEIVED IN WRITING FROM THE IRRIGATION DESIGNER.
8. MAIN LINE SHALL INCORPORATE DIRECTIONAL FITTINGS & SHALL BE HYDROSTATICALLY TESTED WITH IRRIGATION DESIGNER PRESENT. CONTRACTOR SHALL PROVIDE 48 HOUR WRITTEN NOTICE TO IRRIGATION DESIGNER. CONTRACTOR SHALL PROVIDE TEST RESULTS IN WRITING TO LANDSCAPE ARCHITECT.
9. NO BENDING OF IRRIGATION LINES WILL BE ALLOWED.
10. ALL PIPE CUTS SHALL BE MITERED TO 90 DEGREES & ALL BURRS SHALL BE REMOVED PRIOR TO SOLVENT WELDING. PIPE THREE INCHES OR LARGER MUST HAVE FILED BEVELED EDGE A MINIMUM OF ONE FOURTH (1/4) THE WIDTH OF PIPE WALL TO ASSURE A PROPER SOLVENT WELD.
11. PIPE SOLVENT WELDING PROCEDURES ON ALL JOINTS SHALL BE SPECIFIED AS FOLLOWS: FIRST USE SOLVENT WELD ON ALL PLASTIC PIPE PER MANUFACTURER'S RECOMMENDATIONS. ONCE WELD IS SET, PIPE SHALL NOT BE MOVED FOR ANY REASON UNTIL SET TIMES HAVE BEEN ACHIEVED, WATER SHALL NOT BE TURNED ON UNTIL ALL CURE TIMES HAVE BEEN ACHIEVED.
12. SLEEVES SHALL BE EXTENDED 24" BEYOND EDGE OF HARD SURFACES, WHERE POSSIBLE, WRAP ENDS WITH FOUR MIL PLASTIC AND TAPE WITH GOOD QUALITY PLASTIC TAPE, GRAY DUCT TAPE IS NOT ACCEPTABLE.
13. FIELD WIRING SHALL BE IN A SEPARATE TRENCH MIN. 5' EXPANSION LOOPS SHALL BE PROVIDED EVERY 200 FEET, WIRE SHALL NOT BE STRETCHED TIGHT. VALVE WIRE SHALL BE STANDARD COLORS RED (HOT) AND WHITE (COMMON) & LABELED AT CONTROLLER AND IN VALVE BOX. CONNECTIONS AT VALVES MUST BE MADE WITH DRI-SPLICE CONNECTORS. CONNECTORS MUST BE READY FILLED FROM FACTORY WITH SILICONE. NO SPLICING OF WIRES SHALL BE ALLOWED
14. CONTRACTOR SHALL FURNISH ALL WARRANTY INFORMATION TO CLIENT AND COMPLETE AN INFORMATIONAL AND MAINTENANCE MEETING WITH CLIENT'S REPRESENTATIVE AT COMPLETION OF PROJECT, PRIOR TO FINAL ACCEPTANCE.
15. IRRIGATION IN TEXAS IS REGULATED BY THE TEXAS COMMISSION ON ENVIRONMENTAL QUALITY (TCEQ), P.O. BOX 13087 AUSTIN, TX 78711-3087, WWW.TCEQ.TEXAS.GOV.

MAINTENANCE AND WARRANTY

1. IRRIGATION SYSTEM MAINTENANCE SHALL INCLUDE BUT IS NOT LIMITED TO REPAIRING LEAKS, CLEANING, ADJUSTING AND MAINTAINING IRRIGATION COMPONENTS, ENSURING VALVES AND DIAPHRAGMS ARE WORKING CORRECTLY AND CONTROLLED FROM CONTROLLER AND ENSURING EMITTERS ARE ON THE TOP OF THE PLANT'S ROOTBALL.
2. UPON COMPLETION, ALL IRRIGATION SHALL BE GUARANTEED FOR THE PERIOD OF ONE YEAR, BEGINNING ON THE DATE OF FINAL CONTRACT ACCEPTANCE.

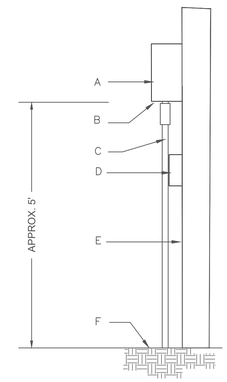

NOTES:

1. CONTRACTOR SHALL GROUND CABINET TO GROUNDING ROD WITH #10 GAUGE OR HEAVIER STRANDED COPPER WIRE AS PER MANUFACTURER'S RECOMMENDATIONS.
2. IF NO POWER OUTLET AVAILABLE FOR USE, CONTRACTOR SHALL PROVIDE POWER OUTLET.
3. CONTRACTOR SHALL COORDINATE EXACT LOCATION OF CONTROLLER AND POWER OUTLET WITH OWNER'S REPRESENTATIVE.

LEGEND:

A. CONTROLLER, INSTALL AT EYE LEVEL
B. BOTTOM OF CONTROLLER BOX INSTALL APPROX. 5 FT. ABOVE FINISH GRADE
C. ELECTRICAL SUPPLY AND VALVE COMMON AND CONTROL WIRES IN PVC CONDUIT, SIZE AS PER MANUFACTURER'S RECOMMENDATIONS
D. POWER OUTLET, COVER AND SEAL ALL OPENINGS MADE TO BUILDING WALL.
E. BUILDING OR FREESTANDING WALL
F. FINISH SURFACE

(A) WALL MOUNTED CONTROLLER

NOT TO SCALE

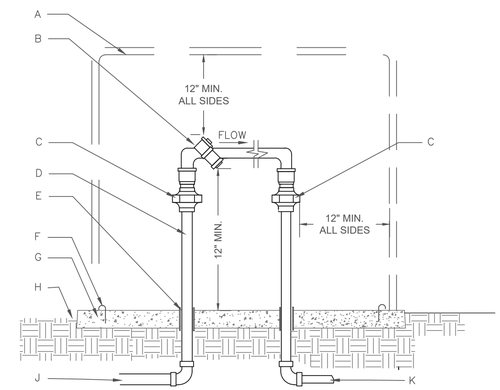

LEGEND:

A. HOT BOX INSULATED ENCLOSURE, SIZE TO ALLOW FOR SPECIFIED CLEARANCES
B. BACKFLOW PREVENTER VALVE
C. SCHEDULE 80 PVC UNION
D. FINISH TYPE "K" HARD DRAWN COPPER RISERS & FITTINGS
E. PVC SLEEVE
F. "J" ANCHOR BOLTS
G. 4" DEPTH 3,000 PSI CONCRETE SLAB
H. FINISH GRADE
J. SUPPLY LINE
K. IRRIGATION MAIN LINE

NOTES:

1. PROVIDE MIN. R-25 INSULATION BLANKET TO PROTECT BACKFLOW VALVE FROM FREEZE DAMAGE.
2. PROVIDE HOT BOX INSULATED ENCLOSURE OR APPROVED EQUAL, INSTALL PER MANUFACTURER'S RECOMMENDATIONS.
3. INSTALL J-BOLTS TO SECURE INSULATED ENCLOSURE.

(B) REDUCED PRESSURE PRINCIPLE ASSEMBLY

NOT TO SCALE

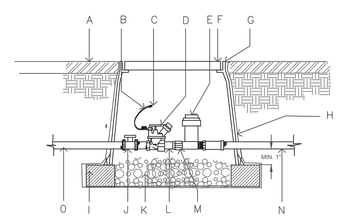

A. TOP OF FINISH MATERIAL
B. 24" WIRE LOOP.
C. DRY SPLICE CONNECTOR OR EQUAL.
D. AUTOMATIC VALVE ZONE KIT. SEE IRRIGATION LEGEND.
E. BASKET FILTER STRAINER INCLUDED IN CONTROL ZONE KIT SHALL BE INSTALLED TO PROVIDE ACCESS FOR MAINTENANCE AND REPLACEMENT. SEE IRRIGATION LEGEND.
F. LOCKING VALVE BOX COVER, COLOR TO MATCH FINISH MATERIAL.
G. CARSON PRODUCTS INC 1419-18 (ABS) VALVE BOX WITH EXTENSIONS AS NECESSARY, COLOR TO MATCH MULCH.
H. PROVIDE DEWITT PRO 5 WEED CLOTH ALONG SIDES AND BASE OF VALVE BOX, TAPE TO ALL INLET & OUTLET PIPE.
I. 8" X 8" X 16" CMU SOLID CONCRETE BLOCK.
J. BALL VALVE. SEE IRRIGATION LEGEND.
K. 4" LAYER OF 3/8" PEA GRAVEL.
L. SCH 80 NIPPLE
M. INLINE PRESSURE REGULATOR INCLUDED IN CONTROL ZONE KIT, SEE IRRIGATION LEGEND.
N. LATERAL LINE.
O. MAIN LINE

NOTE:

1. PVC PIPE SHALL BE INSTALLED CLEAR OF VALVE BOX AND MIN. 1" CLEAR OF SOLID CMU BLOCK.
2. INSTALL 8" EXTENSIONS AS NECESSARY.

(C) DRIP VALVE/FILTER ASSEMBLY

NOT TO SCALE

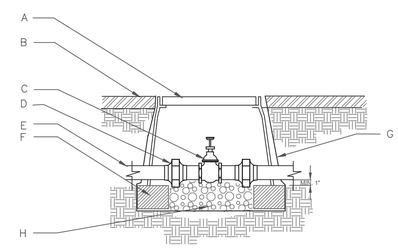

LEGEND:

A. HEAVY DUTY COMMERCIAL GRADE VALVE BOX WITH BOLT DOWN FLAT LID. BOX AND COVER TO MATCH COLOR OF FINISH MATERIAL
B. TOP OF FINISH MATERIAL
C. BRASS ISOLATION VALVE
D. UNION
E. IRRIGATION MAINLINE
F. 8"X 8"X16" SOLID CMU SOLID BLOCK @ EACH CORNER.
G. PROVIDE WEED CLOTH ALONG SIDES AND BASE OF VALVE BOX INSTALLATION. TAPE TO ALL INLET AND OUTLET PIPE AND VALVE BOX WITH HEAVY DUTY PLASTIC 3M TAPE, NO DUCT TAPE
H. 4" DEPTH, 3/8" WASHED PEA GRAVEL

NOTE:

1. PVC PIPE SHALL BE INSTALLED CLEAR OF VALVE BOX AND MIN. 1" CLEAR OF SOLID CMU BLOCK.
2. INSTALL 8" EXTENSIONS AS NECESSARY.

(D) BALL (ISOLATION) VALVE

NOT TO SCALE

FINAL FOR CONSTRUCTION

DESIGN FIRM

DesignScapes
DESIGN : CONSULTING
P.O. BOX 290564 : EL PASO, TX 79929
PH : 915.497.1944
EMAIL: DESIGNSCAPESCONSULTING@GMAIL.COM

SEAL

STATE OF TEXAS
DEBORAH A. BLEA
14746
LICENSED LANDSCAPE ARCHITECT
6·16·25

HORIZ. SCALE: AS INDICATED
VERT. SCALE: AS INDICATED
DATE: JUNE 2025
DESIGNED BY: DEBORAH BLEA
DRAWN BY: STAFF
CHECKED BY: DEBORAH BLEA
APPROVED BY: DEBORAH BLEA
JOB NAME: HCC SITE IMP.

△ REVISIONS
1.
2.
3.
4.
5.
6.
7.
8.

PROJECT
NAME: HUDSPETH COUNTY COURTHOUSE SITE IMPROVEMENTS
ADDRESS: 109 MILLICAN ST. SIERRA BLANCA, TX

THE STATE OF TEXAS
HUDSPETH COUNTY

NOTES & DETAILS IRRIGATION

LI-501

THIS DOCUMENT, WHETHER IN HARD OR DIGITAL IS COPYRIGHTED AND AN INSTRUMENT OF SERVICES IN RESPECT OF THE PROJECT FOR WHICH IT WAS PREPARED. THIS DOCUMENT IS NOT INTENDED OR AUTHORIZED FOR REUSE BY ANY PARTY ON EXTENSIONS OF SUCH PROJECT OR ANY OTHER PROJECT. ANY REUSE, INCLUDING COPYING AND/OR MODIFYING THE DOCUMENT, WITHOUT WRITTEN PERMISSION OF DESIGN SCAPES FOR THE SPECIFIC PURPOSE INTENDED IS A VIOLATION OF FEDERAL COPYRIGHT LAW. UNAUTHORIZED USE OF THIS MATERIAL MAY RESULT IN CIVIL AND/OR CRIMINAL PENALTIES.

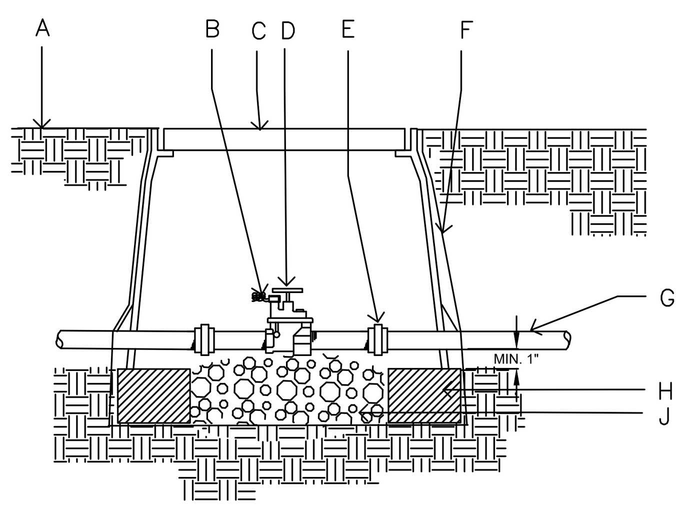

NOTES:
1. PVC PIPE SHALL BE INSTALLED CLEAR OF VALVE BOX AND MIN. 1" CLEAR OF SOLID CMU BLOCK.
2. INSTALL 8" EXTENSIONS AS NECESSARY.

LEGEND
A. TOP OF FINISH MATERIAL
B. WIRE EXPANSION COIL. EXTEND WIRE 12" ABOVE VALVE BOX FOR SERVICE.
C. CARSON BOLT DOWN 1419-18 BOX WITH FLAT COVER, COLOR TO MATCH FINISH MATERIAL.
D. ELECTRIC MASTER VALVE.
E. UNION
F. DEWITT PRO 5 WEED CLOTH ALONG SIDES AND BASE OF VALVE BOX INSTALLATION. TAPE TO ALL INLETS AND OUTLETS PIPE AND VALVE BOX WITH HEAVY DUTY PLASTIC 3M TAPE.
G. MAINLINE.
H. 8"X8"X16" SOLID CMU BLOCK @ EACH CORNER.
J. 4" DEPTH, 3/8" DIAMETER WASHED PEA GRAVEL.

(A) MASTER VALVE
NOT TO SCALE

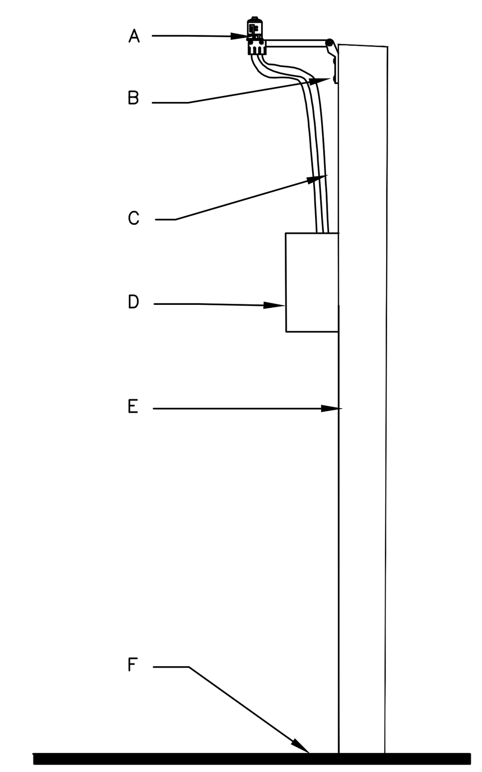

NOTE: INSTALL AT TOP OF BUILDING OR WALL. DO NOT INSTALL UNDER OVERHANG OR EAVE. ENSURE RAIN SENSOR IS NOT INSTALLED UNDER TREE CANOPY.

LEGEND
A. RAIN BIRD RSD-BEx RAIN SENSOR. SET TO 1/8" INSTALL PER MANUFACTURER'S RECOMMENDATIONS.
B. SCREWS PER MANUFACTURER THAT ATTACH RAIN SENSOR TO WALL
C. WIRES FROM RAIN SENSOR TO CONTROLLER, SEAL OPENINGS WITH EXTERIOR GRADE SILICONE SEALANT.
D. CONTROLLER
E. BUILDING OR FREE STANDING WALL
F. FINISH GRADE

(B) RAIN SENSOR
NOT TO SCALE

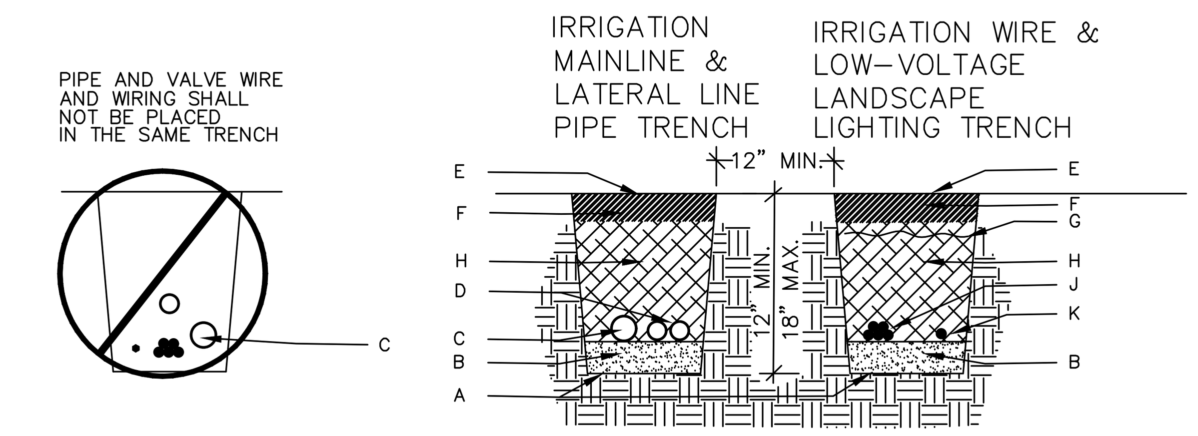

LEGEND
A. BOTTOM OF EXCAVATED NATIVE SOIL TRENCH, IF ROCKY OR CALICHE SOILS ARE ENCOUNTERED, ADD SAND ON BOTTOM OF TRENCH
B. 1" DEEP BEDDING SAND WHERE ROCKY OR CALICHE SOILS ARE ENCOUNTERED,
C. IRRIGATION SYSTEM MAIN LINE PIPE.
D. IRRIGATION SYSTEM LATERAL LINE PIPE
E. FINISH GRADE
F. FINISH MATERIAL
G. CAUTION TAPE
H. BACKFILL SOIL, ROCKS GREATER THAN 1/2" SHALL BE REMOVED IN BACKFILL SOIL
J. IRRIGATION SYSTEM VALVE WIRING.
K. LOW VOLTAGE LANDSCAPE LIGHTING WIRE

NOTES:
1. WATER PIPE AND ELECTRICAL WIRE SHALL BE PLACED IN SEPARATE TRENCHES.
2. PROVIDE A 24-INCH LOOP EVERY 200 FEET FOR ALL WIRING TO ALLOW FOR MAINTENANCE.
3. LOOSELY TIE IRRIGATION VALVE WIRE BUNDLES WITH PLASTIC ZIP TIES EVERY 100 FEET.
4. NOTIFY LANDSCAPE ARCHITECT IN WRITING FOR TRENCH INSPECTION PRIOR TO COVERING.

(E) DEPTH OF BURY
NOT TO SCALE

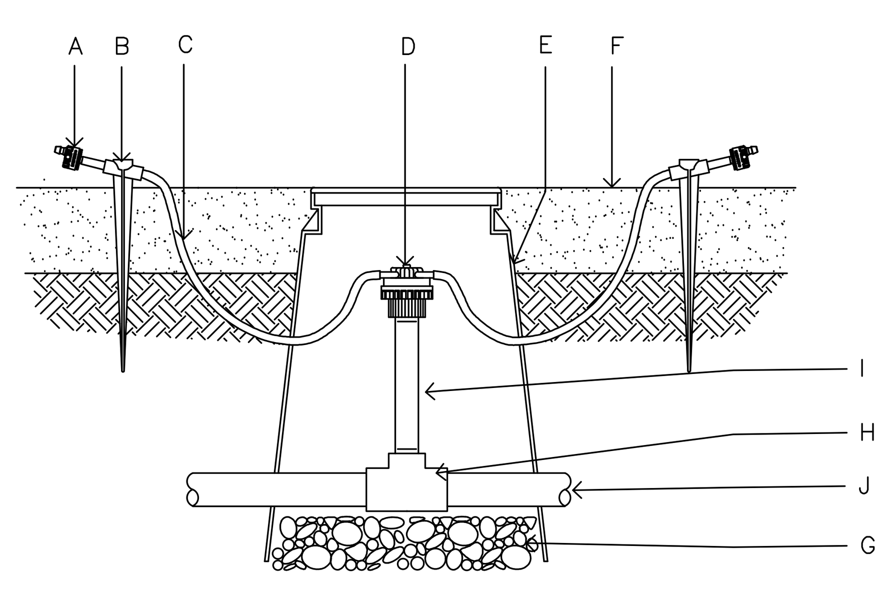

A. 2 GPH PRESSURE COMPENSATING SINGLE OUTLET BARB INLET EMITTER, SEE IRRIGATION LEGEND FOR QUANTITY.
B. 1/4-INCH TUBING STAKE
C. 1/4-INCH VINYL DISTRIBUTION SPAGHETTI TUBING: COIL ADDITIONAL 9" OF TUBING FOR EACH TUBE IN EMITTER BOX TO FACILITATE MAINTENANCE.
D. MULTI-OUTLET EMISSION DEVICE, INSTALL OUTSIDE OF ROOTBALL, BUT WITHIN THE 5' CANOPY LINE
E. CARSON 910, 10" ROUND VALVE BOX, WITH COVER, BOX AND BOX COLOR SHALL MATCH FINISH MATERIAL.
F. TOP OF MULCH.
G. 3-INCH MIN. DEPTH OF 3/8-INCH PEA GRAVEL.
H. PVC SCH 40 TEE OR ELL.
I. PVC SCH 80 CLOSE NIPPLE & RISER AS NECESSARY.
J. PVC LATERAL PIPE.
K. DIFFUSER BUG CAP.

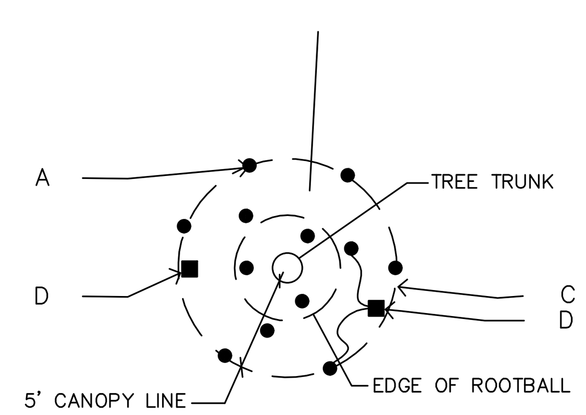

SPACE TUBES AND OUTLETS IN 1/3 INCREMENTS IN CIRCULAR PATTERN AROUND BASE OF ROOTBALL AND FIVE FEET FROM TREE TRUNK.

TREE PATTERN

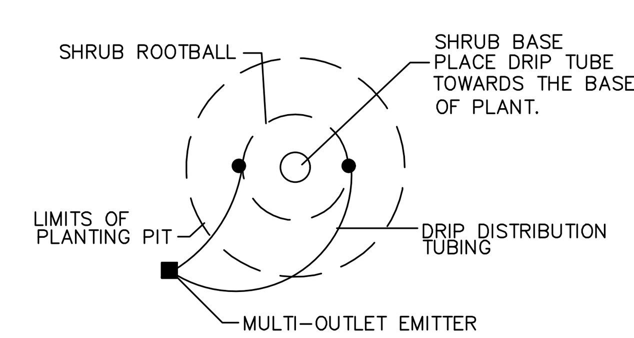

SPACE TUBES AND OUTLETS ON EITHER SIDE OF ROOTBALL.

SHRUB OR GROUNDCOVER PATTERN

NOTES:
1. INSTALL DIFFUSER BUG CAP AT END OF ¼" TUBING AND INSTALL ON TOP OF ROOT BALL AND ON TOP SIDE OF ROOTBALL WHERE SOIL IS SLOPED.
2. INSTALL PER PATTERN LAYOUT ABOVE ON FLAT GROUND, MODIFY AS INDICATED IN NOTE 1 FOR SLOPED SOIL.

(D) MULTI-OUTLET EMITTER
NOT TO SCALE

WATERING SCHEDULE

		FIRST YEAR		YEAR 2-5		YEAR 5-MATURE	
V#	RUN TIME	SUMMER	WINTER	SUMMER	WINTER	SUMMER	WINTER
V1	60 MIN.	2X/WEEK	2X/MONTH	1X/WEEK	2X/MONTH	2X/MONTH	1X/MONTH
V2	30 MIN.	1X/WEEK	2X/MONTH	2X/MONTH	1X/MONTH	1X/2WEEK	1X/MONTH
V3	60 MIN.	3X/WEEK	1X/WEEK	2X/WEEK	2X/MONTH	1X/WEEK	1X/MONTH
V4	60 MIN.	2X/WEEK	2X/MONTH	1X/WEEK	2X/MONTH	2X/MONTH	1X/MONTH
V5	60 MIN.	3X/WEEK	1X/WEEK	2X/WEEK	2X/MONTH	1X/WEEK	1X/MONTH
V6	60 MIN.	3X/WEEK	1X/WEEK	2X/WEEK	2X/MONTH	1X/WEEK	1X/MONTH

NOTE: SUMMER MONTHS SHALL INDICATE MAY – SEPTEMBER AND WINTER MONTHS SHALL BE NOVEMBER THROUGH MARCH. APRIL AND OCTOBER ARE SHOULDER MONTHS AND DEPENDING ON THE WEATHER, CAN BE WATERED WITH EITHER SUMMER OR WINTER WATER SCHEDULE DEPENDING ON THE TEMPERATURES, WINDS, AND MOISTURE.

(E) RECOMMENDED WATERING SCHEDULE
NOT TO SCALE

DESIGN FIRM
DesignScapes
DESIGN : CONSULTING
P.O. BOX 290544 : EL PASO, TX 79929
PH : 915.497.1944
EMAIL: DESIGNSCAPESCONSULTING@GMAIL.COM

SEAL
STATE OF TEXAS REGISTERED LANDSCAPE ARCHITECT DEBORAH A. BLEA 14746 3007
6·16·25

HORIZ. SCALE: AS INDICATED
VERT. SCALE: AS INDICATED
DATE: JUNE 2025
DESIGNED BY: DEBORAH BLEA
DRAWN BY: STAFF
CHECKED BY: DEBORAH BLEA
APPROVED BY: DEBORAH BLEA
JOB NAME: HCC SITE IMP

△ REVISIONS
1.
2.
3.
4.
5.
6.
7.
8.

PROJECT
NAME: HUDSPETH COUNTY COURTHOUSE SITE IMPROVEMENTS
ADDRESS: 109 MILLICAN ST. SIERRA BLANCA, TX

THE STATE OF TEXAS HUDSPETH COUNTY

FINAL FOR CONSTRUCTION

NOTES & DETAILS IRRIGATION

LI-502